MP MASTER
MA34072

MODEL 6316A-29
FREQUENCY METER
SERIAL NO. JFH
(A)

SYSTRON DONNER

# ADDENDUM
## MODEL 6316A-29

The Model 6316A-29 Frequency Meter is a standard Model 6316A Frequency Meter with the following options and changes:

1. The B5 Oscillator Option has been added with a stability of $<\pm 5$ parts in $10^{10}$/24 hours, aging; $<\pm 5$ parts in $10^{11}$ rms/1 s, short term; and $<\pm 5$ parts in $10^{10}$, line change.
2. The EE Nine Digit Option has been added to increase the number of readout digits to nine.
3. The D3 BCD Output Option with a special gate line providing a gate open at +3.5 V and closed at 0.0 V has been added.
4. A modified RI Rear Input Option has been added in which the front panel A INPUT 0-.1 GHz, J1, and .1-.3 GHz, J9 connectors are removed and their rear panel counter parts added.
5. A 10 MHz Multiplier circuit and rear panel 10 MHz OUT BNC connector have been added.

The following drawings have been added to the manual to reflect the above changes:

| | |
|---|---|
| FINAL ASSEMBLY PARTS LIST | #S49101 |
| BLOCK DIAGRAM, MODEL 6316A-29 | #S29591 |
| BCD OUTPUT FUNCTION TO PIN ASSIGNMENTS | #S29559 |
| D3 OPTION FINAL ASSEMBLY | #S49102 |
| D3 OPTION J7 CABLE ASSEMBLY | #S49105 |
| D3 OPTION DECADE & LOOSE WIRE LIST | #S49103 |
| D3 OPTION P.C. BOARD ASSEMBLY | #S29551 |
| D3 OPTION SCHEMATIC | #S29550 |
| D3 OPTION PARTS LIST | #S29551 |
| 10 MHz MULTIPLIER P.C. ASSEMBLY | #19942 |
| 10 MHz MULTIPLIER SCHEMATIC | #19727 |
| 10 MHz MULTIPLIER PARTS LIST | #19942 |
| B5 OPTION FINAL ASSEMBLY | #27228 |
| EE OPTION FINAL ASSEMBLY | #25421 |
| RI OPTION FINAL ASSEMBLY | #S49106 |
| FINAL ASSEMBLY, MODEL 6316A | #25316 |

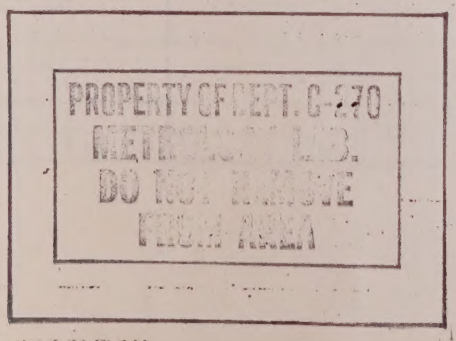


MODEL 6316A-29
FREQUENCY METER
SERIAL NO. (A) JFH

| SIZE | ITEM NO | PART NUMBER | DESCRIPTION | REFERENCE NUMBER | ASSY. QTY. | UNIT QTY. |
|---|---|---|---|---|---|---|
| | 1 | S49101 | FINAL ASSY | NO DWG | | |
| D | 3 | | BLOCK DIAGRAM | S29591 | | |
| D | 5 | | D3 OPTION SCHEM | S29550 | | |
| C | 7 | S49102 | D3 OPTION FINAL ASSY | P/L ON DWG | 1 | |
| C | 9 | 19942 | 10 MHZ MULT PC ASSY | SEP P/L | 1 | |
| D | 11 | 27228-4 | B5 OPTION ASSY | P/L ON DWG | 1 | |
| B | 13 | 25421 | EE OPTION ASSY (9 DIGITS REQD) | P/L ON DWG | 1 | |
| C | 15 | S49106 | RI OPTION ASSY | P/L ON DWG | 1 | |
| D | 17 | 25316 | FINAL ASSY 6316A | P/L ON DWG | 1 | |
| A | 18 | 23345 | SPACER, SHIELD | | 2 | |
| B | 19 | 23298 | SHIELD, MULT. P.C. ASS'Y. | | 1 | |

NOTE: THIS UNIT REQ'S. REAR PANEL LABEL CHG. "T B OUT" S/B CHG'D. TO "10 MHz OUT". MAKE LABEL ON ADHESIVE BACKED FOIL APPROX. 1/2 x 1/2 ℄ TYPE

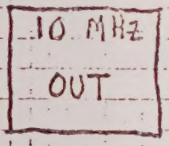


| ISS. | REVISION |
|---|---|
| A | ADDED ITEMS 18 & 19 PER ECA REV 1-8-74 |

PREP. RL
CHECK
APPR.
USED ON

SYSTRON DONNER

FINAL ASSY
6316A-29

℄ S49101

ISS. A

SHEET 1 OF 1

MODEL
JOB NO.
LOT QTY.
LOT NO.

| | | | | |
|---|---|---|---|---|
| B | ADDED NOTE RE J3 | | 7/64 | RF |
| C | 10 MHz MULTI "INPUT" WAS CONN. TO 1 MHz MULTI OUTPUT | - | - 2-74 | LL |

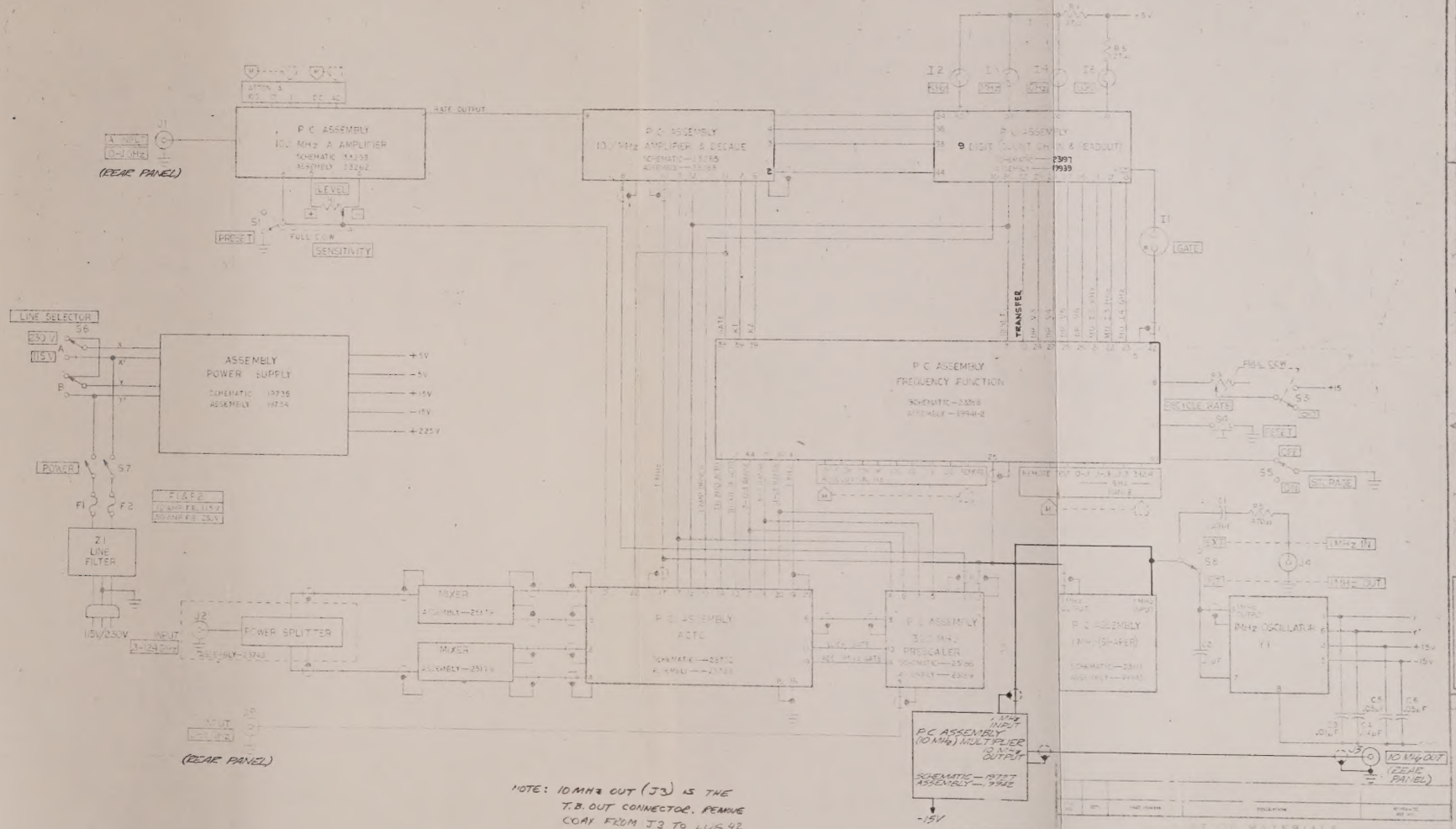


NOTE: 10 MHz OUT (J3) IS THE T.B. OUT CONNECTOR. REMOVE COAX FROM J3 TO LUG 42 FREQ. FUNC. BEFORE WIRING IN 10 MHz COAX.

Digitized by the Internet Archive
in 2025

https://archive.org/details/manualsplus_05961

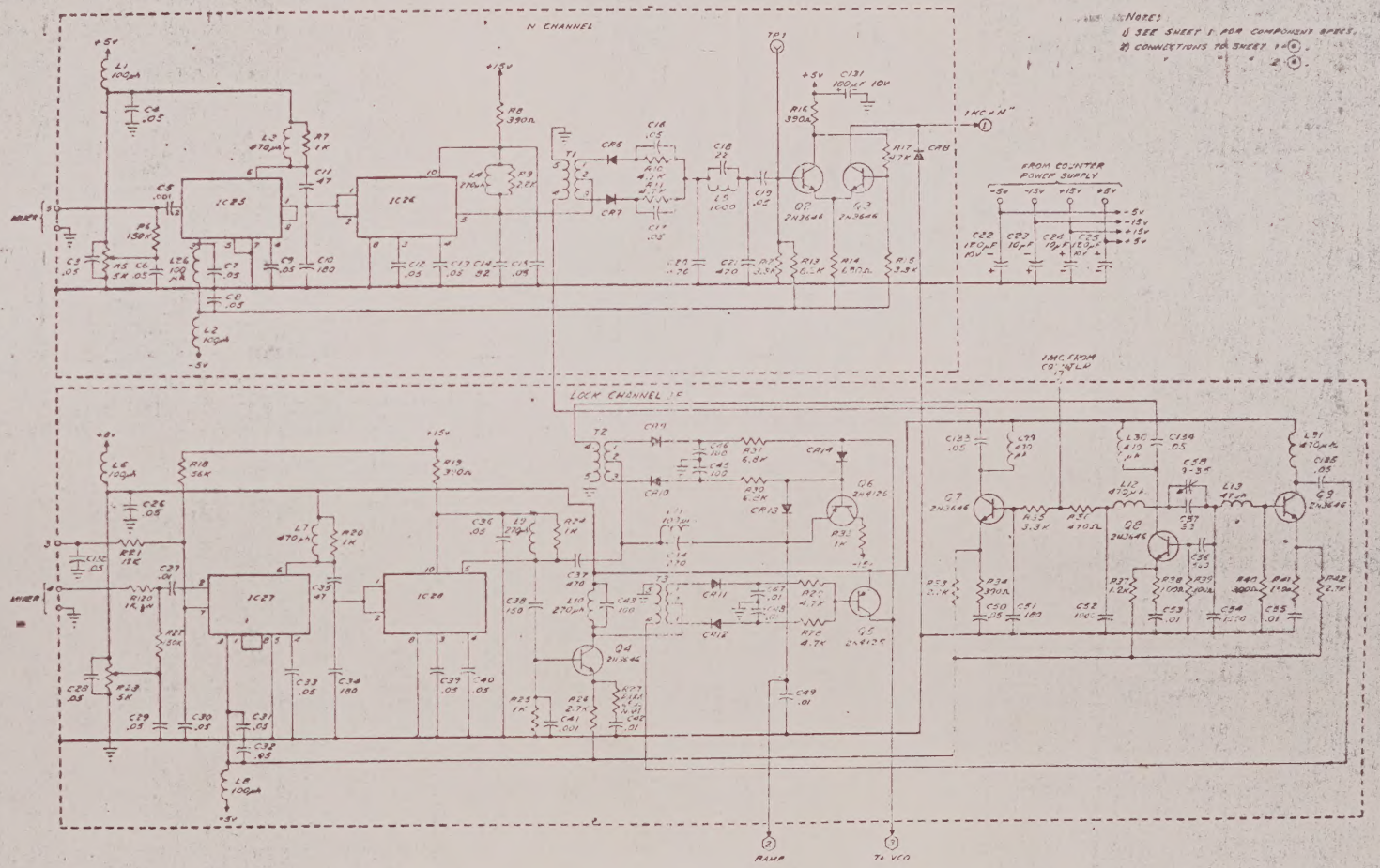


Figure 6-10. Schematic ACTO Sheet 2 [23730]

B DELETED ALL DVM INFORMATION | RTB | 1/21/70

| Control Character | Code | J7 Pin |
|---|---|---|
| $10^0$ | 1 | 1 |
| $10^0$ | 2 | 2 |
| $10^0$ | 4 | 26 |
| $10^0$ | 8 | 27 |
| $10^1$ | 1 | 3 |
| $10^1$ | 2 | 4 |
| $10^1$ | 4 | 28 |
| $10^1$ | 8 | 29 |
| $10^2$ | 1 | 5 |
| $10^2$ | 2 | 6 |
| $10^2$ | 4 | 30 |
| $10^2$ | 8 | 31 |
| $10^3$ | 1 | 7 |
| $10^3$ | 2 | 8 |
| $10^3$ | 4 | 32 |
| $10^3$ | 8 | 33 |
| $10^4$ | 1 | 9 |
| $10^4$ | 2 | 10 |
| $10^4$ | 4 | 34 |
| $10^4$ | 8 | 35 |
| $10^5$ | 1 | 11 |
| $10^5$ | 2 | 12 |
| $10^5$ | 4 | 36 |
| $10^5$ | 8 | 37 |
| $10^6$ | 1 | 13 |
| $10^6$ | 2 | 14 |
| $10^6$ | 4 | 38 |
| $10^6$ | 8 | 39 |
| $10^7$ | 1 | 15 |
| $10^7$ | 2 | 16 |
| $10^7$ | 4 | 40 |
| $10^7$ | 8 | 41 |
| $10^8$ | 1 | 21 |
| $10^8$ | 2 | 22 |
| $10^8$ | 4 | 46 |
| $10^8$ | 8 | 49 |

| Annunciation | Code | J7 Pin |
|---|---|---|
| Measurement Unit | 1 | 17 |
| | 2 | 18 |
| | 4 | 42 |
| | 8 | 43 (gnd) |
| Decimal Point | 1 | 19 |
| | 2 | 20 |
| | 4 | 44 |
| | 8 | 45 |

RECORDER CONTROL

| | | |
|---|---|---|
| + Reference | - | 24 |
| - Reference | - | 25 |
| Instrument Gnd | - | 50 |
| Print Command | - | 23 |
| Reset Inhibit | - | 47 |
| GATE LINE | - | 48 |

BCD TRANSLATIONS

Measurement Unit
- [illegible] = Binary 1
- [illegible] = Binary 2
- Sec = Binary 3
- ms = Binary 4
- μs = Binary 5

Measurement Unit, [illegible]
- [illegible] = Binary 1
- [illegible] = Binary 2

RTB 1-21-70

1-28-70

CORPORATION

CONCORD, CALIFORNIA

BCD OUTPUT [illegible]

SPECIFICATIONS

529559 C

APPLICATION

| DESCRIPTION | SCR NO | ECO NO | DATE | APP BY |
|---|---|---|---|---|
| $10^8$ (1) WAS *OPTION AT CUSTOMER'S REQUEST | — | — | 5/6/70 | [illegible] |

BCD TRANSLATIONS - Continued

Decimal Location
Location of the decimal point is indicated by a digit preceding the measurement unit. The digit indicates the decimal location (from right to left). Thus 195.27[illegible] would appear:

4-2-1-9-8-2-7-4-1.

The SD 6000 Series digital output produces a binary number equal to the location number. Thus:

| Location | Binary |
|---|---|
| 1 | 1 |
| 2 | 2 |
| 3 | 3 |
| 4 | 4 |
| 5 | 5 |
| 6 | 6 |
| 7 | 7 |
| 8 | 8 |

| | | | | |
|---|---|---|---|---|
| RTB 1-21-70 | | SYSTRON DONNER CORPORATION CONCORD, CALIFORNIA | BCD OUTPUT FUNCTION TO SIM ASSIGNMENT SPECIFICATIONS | |
| 1-28-70 | | | | |
| 316A-Z9 | | | | |
| APPLICATION | SCALE | | DWG NO. 529559 | C |

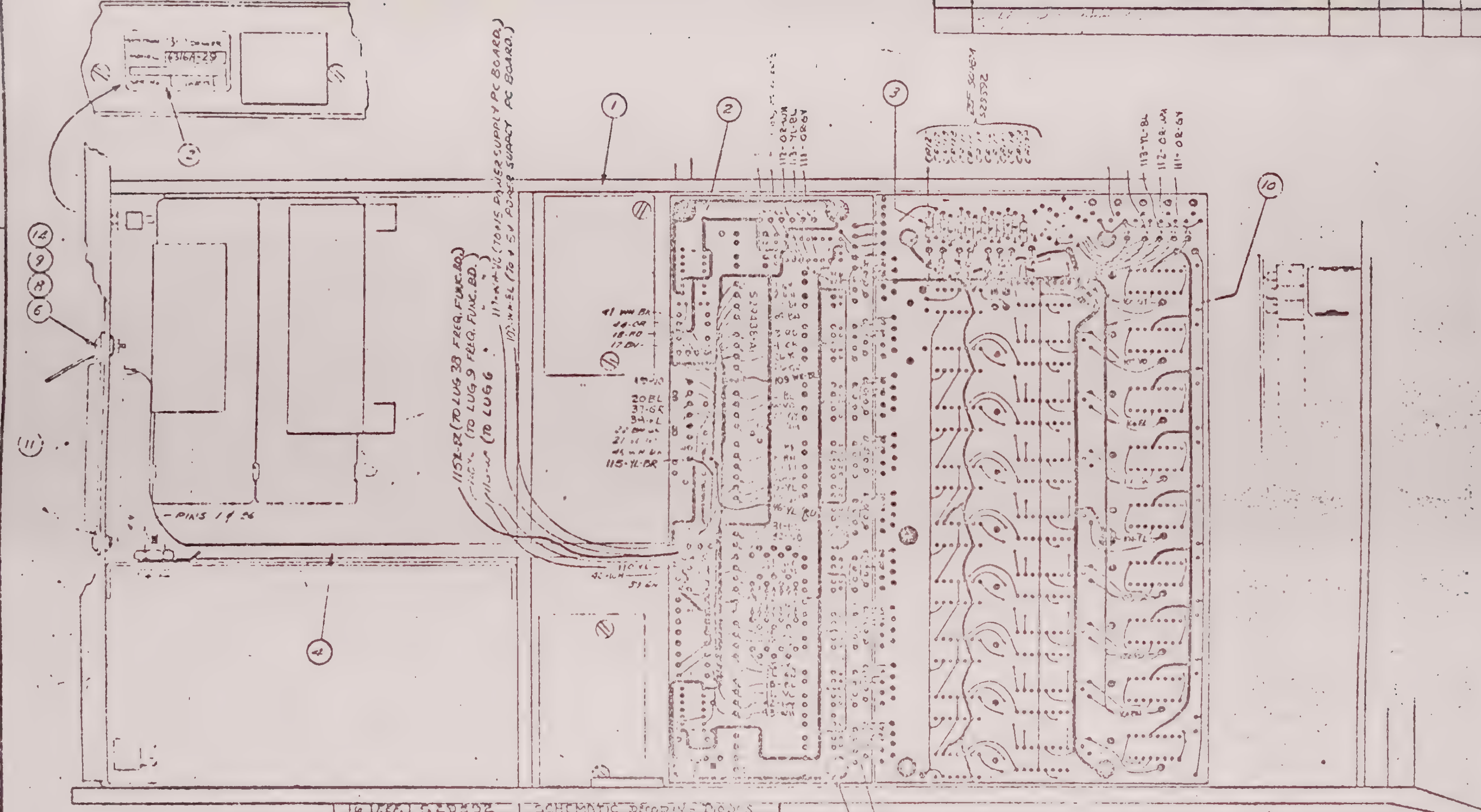


| | | | |
|---|---|---|---|
| 16 | [illegible] | [illegible] | SCHEMATIC DIAGRAM, [illegible] |
| 15 | 40 | W-0087 | JUMPER |
| 14 | 2 | H-0198 | WASHER - Nº2 FLAT |
| 13 | REF | A S29559 | [illegible] |
| 12 | 1 | [illegible] | NAMEPLATE (SEE NOTE 1) |
| 11 | 1 | J-1111 | CONNECTOR 50 PIN [illegible] (NOT SHOWN) |
| 10 | - | S49103 | LOOSE WIRE LIST |
| 9 | 2 | H-[illegible] | NUT - Nº2 56 |
| 8 | 2 | H-[illegible] | WASHER - Nº2 SPLIT LOCK |
| 7 | 5 | H-[illegible] | WASHER Nº[illegible] [illegible] TOOTH |
| 6 | 2 | H-127[illegible] | SCREW, 2-56 x [illegible] PHMS PHILLIPS |
| 5 | 5 | H-[illegible] | SCREW, [illegible] PHMS |
| 4 | 1 | S49105 | D3 OPTION CABLE [illegible] |
| 3 | 13 | [illegible] | [illegible] 6700 [illegible] |
| 2 | 1 | S29551 | D3 OPTION PC ASSEMBLY |
| 1 | 1 | 25316 | 6316A [illegible] |
| ITEM NO | QTY. | PART NUMBER | DESCRIPTION |

6316A-29

DRAWN R.E. [illegible]

UNLESS OTHERWISE SPECIFIED DIMENSIONS ARE IN INCHES DECIMAL TOLERANCE

DWG SIZE C

SYSTRON DONNER CORPORATION
CONCORD, CALIFORNIA

D3 OPTION
FINAL ASSEMBLY

DWG NO S49102 ISSUE 1

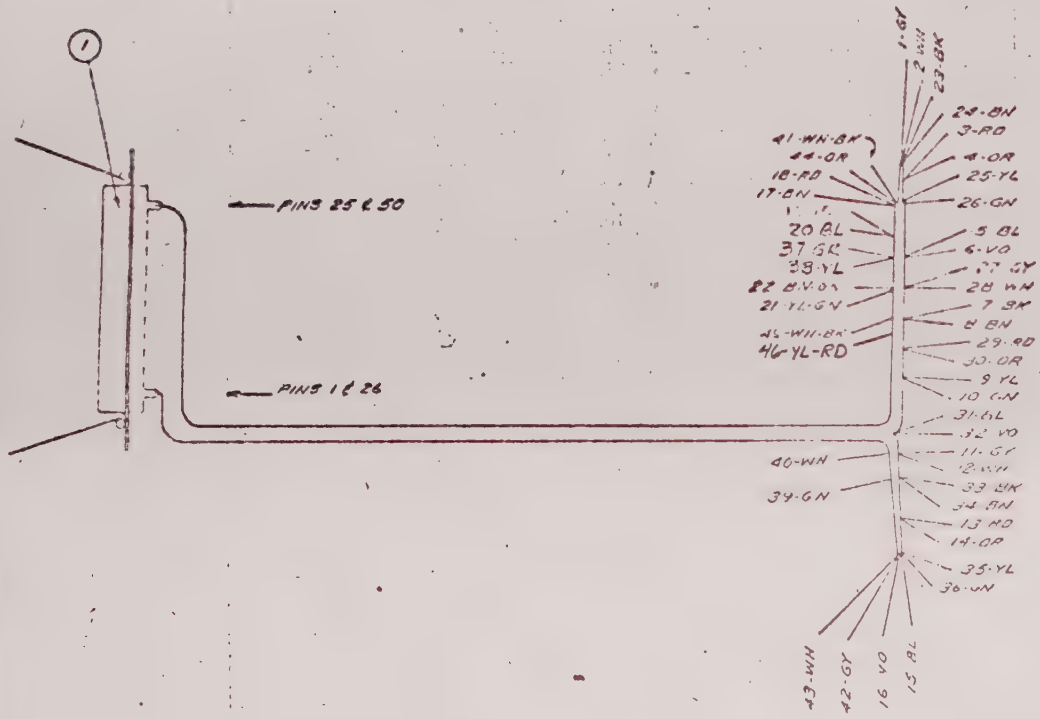


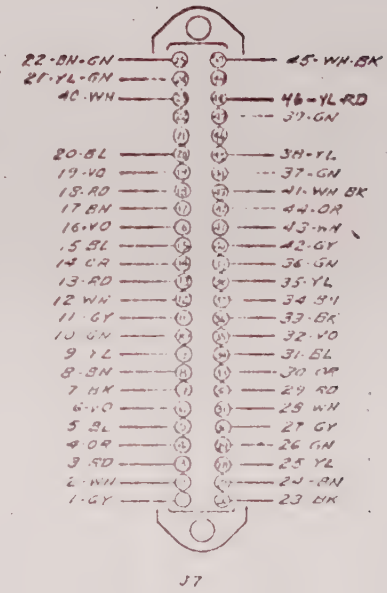


NOTE:
1) WIRE LIST A S49104
2) THIS CABLE CAN BE MADE FROM S29442 BY ADDING WIRE NO. 46

| ITEM NO | QTY. | PART NUMBER | DESCRIPTION | SCHEMATIC REF NO |
|---|---|---|---|---|
| 1 | 1 | J0170 | CONNECTOR, 50 PIN BLUE RIBBON | |

LIST OF MATERIALS

| | |
|---|---|
| 6316A-29 | S49102 |
| USED ON | NEXT ASSY |
| APPLICATION | |

DRAWN RR 11/27/71 DATE
CHECK DATE
ELECT DATE
MECH DATE
PROJECT DATE
APPROVAL DATE
SCALE
DO NOT SCALE DRAWING
DWG SIZE C
SHEET 1 OF 1

UNLESS OTHERWISE SPECIFIED DIMENSIONS ARE IN INCHES
DECIMAL TOLERANCE
.X
.XX
.XXX
ANGLES ±

SYSTRON DONNER
CORPORATION
CONCORD, CALIFORNIA

MATERIAL

D3 OPTION, J7 CABLE

DWG NO S49105
ISSUE 1

| NO. | [illegible] TYPE | SIZE | [illegible] | COLOR | TOTAL LENGTH | STRIP LENGTH "A" | STRIP LENGTH "B" | FROM | TO |
|---|---|---|---|---|---|---|---|---|---|
| 1 | E | 24 | BT | BN | 9 1/2 | 1/8 | 1/8 | DECADE 3D LUG - 1 | DECADE 3D LUG - 21 |
| 2 | | | | RD | 8 1/2 | | | 2 | 20 |
| 3 | | | | OR | 7 1/2 | | | 3 | 19 |
| 4 | | | | YL | 6 1/2 | | | 4 | 18 |
| 5 | | | | GN | 5 1/2 | | | 5 | 17 |
| 6 | | | | BL | 4 3/4 | | | 6 | 16 |
| 7 | | | | VO | 3 1/2 | | | 7 | [illegible] |
| 8 | | | | GY | 2 1/2 | | | 8 | [illegible] |
| 9 | | | | WH-BL | 15 1/2 | | | PWR SUPPLY + 5V | [illegible] PCB + 5V |
| 10 | | | | YL | 14 1/2 | | | FREQ. FUNC. LUG 9 | [illegible] |
| 11 | | | | OG-GY | 6 1/2 | | | DECADE 3D LUG - 38 | DS 3D LUG - 51 |
| 12 | | | | OR-WH | 6 3/4 | | | 39 | 53 |
| 13 | | | | YL-BK | 6 1/4 | | | 40 | 52 |
| 14 | | | | | | | | | |
| 15 | | | | YL-BR | 15 1/2 | | | FREQ. FUNC. LUG 33 | 56 |
| 16 | | | | WH | 15 1/2 | | | FREQ. FUNC LUG 6 | [illegible] |
| 17 | | | | WH-VO | 15 1/2 | | | [illegible] | [illegible] |

/22/71

RL

UNLESS SPECIFIED, DIMENSIONS INCHES

TOLERANCES

FRACTIONAL ± 1/64

DECIMAL ± .005

ANGULAR ± ½°

DET. NO. | ITEM | SIZE & MATERIAL OR DWG. NO. | QTY.

SCALE ~

PART OF S49102

SYSTRON DONNER

316A-29

TITLE: DB OPTION, DECADE & MODE WIRE LIST

SHEET 1 OF 1

DRAWING NO. S49103

ISSUE 1

Ref. S29440B

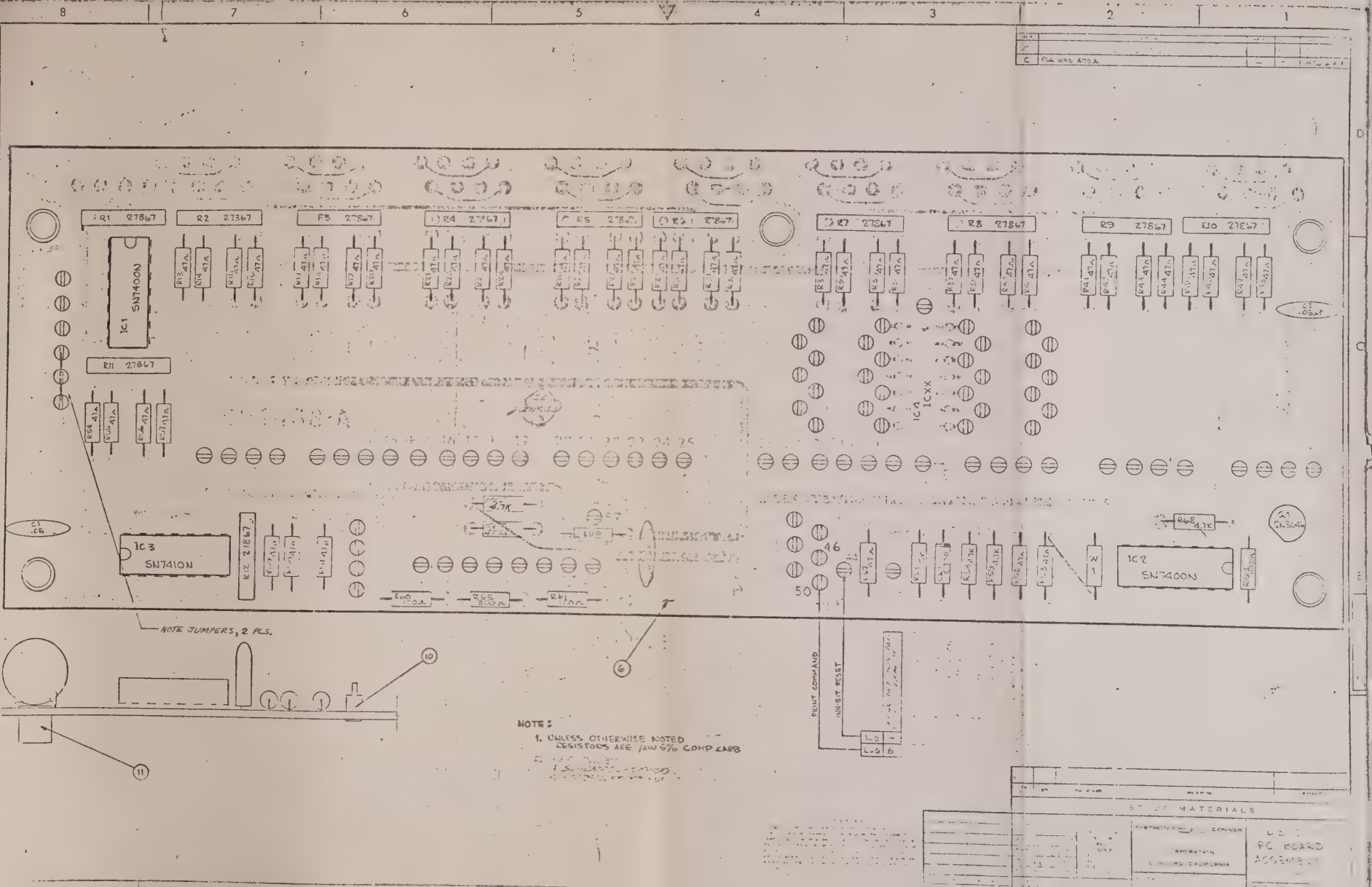
R1 27867
R2 27867
R3 27867
R4 27867
R5 27867
R6 27867
R7 27867
R8 27867
R9 27867
R10 27867
R11 27867
R12 27867
IC1 SN7400N
IC2 SN7400N
IC3 SN7410N
IC4 ICXX
R68 4.7K
NOTE JUMPERS, 2 PLS.
PRINT COMMAND
IOINSRT RESET
NOTE:
1. UNLESS OTHERWISE NOTED RESISTORS ARE 1/4W 5% COMP CARB
BILL OF MATERIALS
PC BOARD ASSEMBLY

ENGINEERING USE ONLY

| ITEM NO. | PART NUMBER 1 2 3 4 5 6 7 | DESCRIPTION | REFERENCE | ASSY QTY | UNIT QTY |
|---|---|---|---|---|---|
| | 0529551 | D3 OPTION PC BD ASS'Y (6316A-29) | | | |
| | | SCHEMATIC | S29550 | | |
| C | 0529438 | SPEC PC BD D3 | | 1 | 1 |
| | | ARTWORK PC BD D3 | S29437 | | |
| | 100482 | [illegible] | | [illegible] | [illegible] |
| | 100517 | STANDOFF | | 5 | 5 |
| 8 | 101449 | TRANSISTOR 2N3646 | Q1 | 2 | 2 |
| | | S/A Q1 | Q2 | | |
| | 019705 | IC SN7400N | IC1 | 2 | 2 |
| | | S/A IC1 | IC2 | | |
| | 019706 | IC SN7410N | IC3 | 1 | 1 |
| | 006700 | DIODE 6700 | CR1 | 1 | 1 |
| | 027867 | RESISTOR 27867 | R1 | 12 | 12 |
| | | S/A R1 | R2 | | |
| 30 | | S/A R1 | R3 | | |
| 31 | | S/A R1 | R4 | | |
| | | S/A R1 | R5 | | |
| | | S/A R1 | R6 | | |
| | | S/A R1 | R7 | | |
| | | S/A R1 | R8 | | |
| | | S/A R1 | R9 | | |
| | | S/A R1 | R10 | | |
| | | S/A R1 | R11 | | |
| | | S/A R1 | R12 | | |
| 13 | 101560 | RESISTOR 47Ω 1/4W 5% CC | R13 | 46 | 46 |
| | | S/A R13 | R14 | | |
| 40 | | S/A R13 | R15 | | |
| 43 | | S/A R13 | R16 | | |
| 44 | | S/A R13 | R17 | | |
| 45 | | S/A R13 | R18 | | |
| 46 | | S/A R13 | R19 | | |
| 47 | | S/A R13 | R20 | | |
| 48 | | S/A R13 | R21 | | |
| 49 | | S/A R13 | R22 | | |
| 50 | | S/A R13 | R23 | | |

REVISION: REMOVED ITEMS 23, 129, & 131

ISS. B C

R66 WAS 470Ω 1-29-74 BAK

rep RTB 11-24-69 | cked | Approved

6316A-29

USED ON | USED ON

SYSTRON DONNER CORPORATION

D3 OPTION PC BD ASSY (6316A-29)

0529551

ISSUE C

SD Form E-[illegible]-A

ENGINEERING USE ONLY

| ITEM NO. | PART NUMBER 1 2 3 4 5 6 7 | DESCRIPTION | REFERENCE | ASSY QTY | UNIT QTY |
|---|---|---|---|---|---|
| 51 | | RESISTOR S/A R13 | R24 | | |
| 52 | | S/A R13 | R25 | | |
| 53 | | S/A R13 | R26 | | |
| 54 | | S/A R13 | R27 | | |
| 55 | | S/A R13 | R28 | | |
| 56 | | S/A R13 | R29 | | |
| 57 | | S/A R13 | R29 | | |
| 58 | | S/A R13 | R30 | | |
| 59 | | S/A R13 | R31 | | |
| 60 | | S/A R13 | R32 | | |
| 61 | | S/A R13 | R33 | | |
| 62 | | S/A R13 | R34 | | |
| 63 | | S/A R13 | R35 | | |
| 64 | | S/A R13 | R36 | | |
| 65 | | S/A R13 | R37 | | |
| 66 | | S/A R13 | R38 | | |
| 67 | | S/A R13 | R39 | | |
| 68 | | S/A R13 | R40 | | |
| 69 | | S/A R13 | R41 | | |
| 70 | | S/A R13 | R42 | | |
| 71 | | S/A R13 | R43 | | |
| 72 | | S/A R13 | R44 | | |
| 73 | | S/A R13 | R45 | | |
| 74 | | S/A R13 | R46 | | |
| 75 | | S/A R13 | R47 | | |
| 76 | | S/A R13 | R48 | | |
| 77 | | S/A R13 | R49 | | |
| 78 | | S/A R13 | R50 | | |
| 79 | | S/A R13 | R51 | | |
| 80 | | S/A R13 | R52 | | |
| 81 | | S/A R13 | R53 | | |
| 82 | | S/A R13 | R54 | | |
| 83 | | S/A R13 | R55 | | |
| 84 | | S/A R13 | R56 | | |
| 85 | | S/A R13 | R57 | | |
| [illegible] | 101598 | RESISTOR 4.7K 1/4W 5% CC | R58 | 4 | 4 |
| [illegible] | | S/A R58 | R59 | | |
| [illegible] | 101609 | RESISTOR 100Ω 1/4W 5% CC | R60 | 2 | 2 |
| [illegible] | | S/A R60 | R61 | | |
| 90 | | S/A R15 | R62 | | |
| [illegible] | 101552 | RESISTOR 15K 1/4W 5% CC | R63 | 1 | 1 |
| [illegible] | 101625 | RESISTOR 470Ω 1/4W 5% CC | R64 | 2 | 2 |
| [illegible] | 101537 | RESISTOR 300Ω 1/4W 5% CC | R65 | 1 | 1 |
| 94 | | S/A R58 | R66 | | |
| 95 | | S/A R64 | R67 | | |
| 96 | | S/A R58 | R68 | | |
| 97 | | | | | |
| 98 | | | | | |
| 99 | | | | | |
| 100 | | | | | |

REVISION

ISS.

Prep. ETB 11-24-69 | Approved 12-4-69

6316A-29

USED ON | USED ON

SYSTRON DONNER CORPORATION

DS OPTION PC BD ASSY (6316A-29)

0529551

Sheet 2 of 3

Scale C

SD Form E-1001-A

| | | | | |
|---|---|---|---|---|
| XP3 | CHANGED R4 FROM 1.8K; ADDED TRANSISTOR PAD | — | [illegible] | [illegible] |
| XP4 | ADDED + & − TO C14 | — | [illegible] | [illegible] |
| XP5 | REVISED PER XCO | — | [illegible] | [illegible] |
| A | [illegible] 5 TO RECORDS | — | — | [illegible] |
| B | ADD REF. DATA TO L2 & L3 | — | [illegible] | [illegible] |

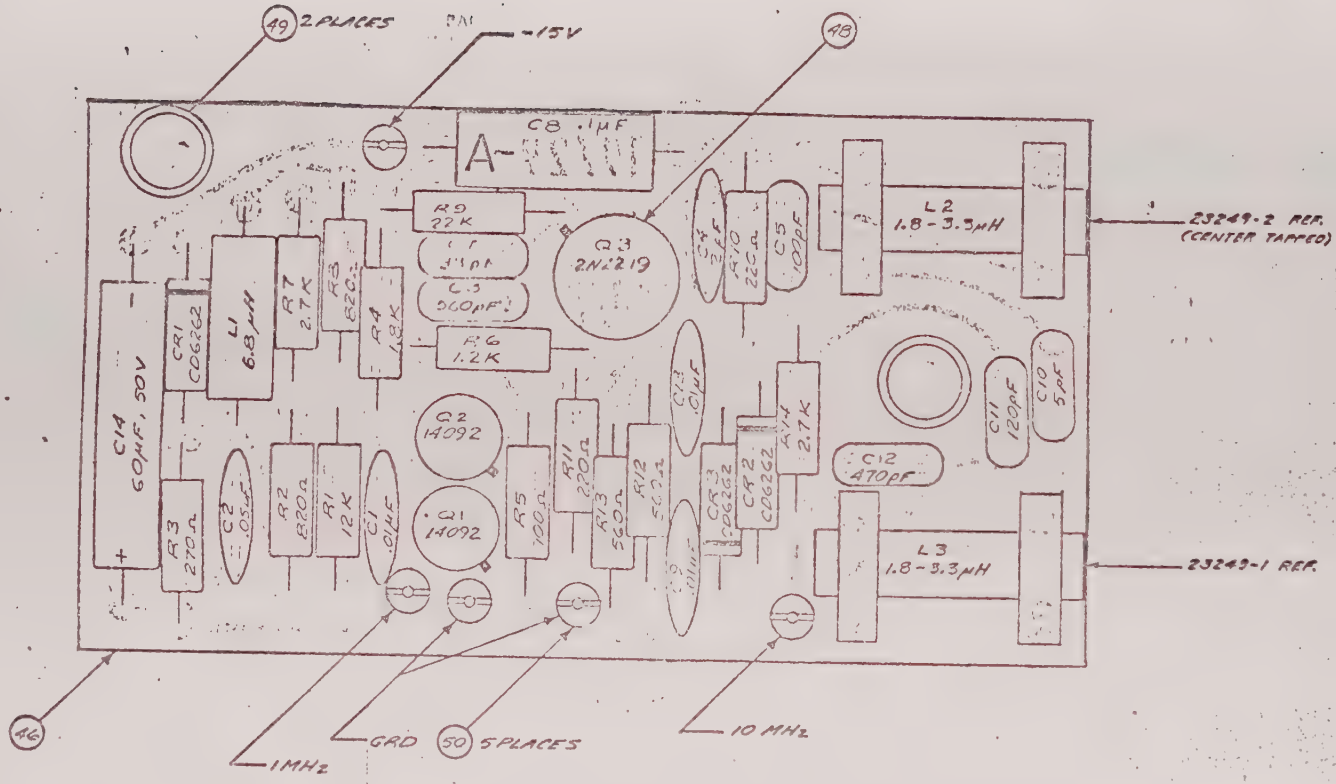


| ITEM NO. | QTY. | PART NUMBER | DESCRIPTION | SCHEMATIC REF. NO. |
|---|---|---|---|---|

LIST OF MATERIALS

| | | | | |
|---|---|---|---|---|
| DRAWN [illegible] DATE | UNLESS OTHERWISE SPECIFIED DIMENSIONS ARE IN INCHES DECIMAL TOLERANCE .X .XX .XXX ANGLES ± | SYSTRON DONNER CORPORATION CONCORD, CALIFORNIA | MULTIPLIER RC ASSEMBLY | |
| CHK. [illegible] DATE | | | | |
| ELEC. DATE | | | | |
| MECH. DATE | | | | |
| PROJECT DATE | | | | |
| APPROVAL DATE | | MATERIAL | | |
| SCALE 1:1 | DO NOT SCALE DRAWING | DWG SIZE C SHT 1 OF | DWG NO 19942 | ISSUE B |

USED ON | NEXT ASSY

APPLICATION

| REVISIONS | | | | | |
|---|---|---|---|---|---|
| ISSUE | DESCRIPTION | SER. NO. | ECO NO. | DATE | APP. BY |
| XP2 | ADDED 19942 TO NEXT ASS'Y. & + − TO C14 | ~ | 0438 | 3/30/67 | RB |
| XP3 | DEL. C6-47PF; C5 WAS 47PF, R12 & R13 WERE 390Ω R14 WAS 560Ω, R11 WAS 470Ω | ~ | 0508 | 6/29/67 | RB |
| XP4 | NOTE 2 WAS L1 L2 | ~ | 0549 | 7/11/67 | [illegible] |
| A | RELEASED FROM XP4 TO RECORDS | — | — | 1/25/67 | [illegible] |

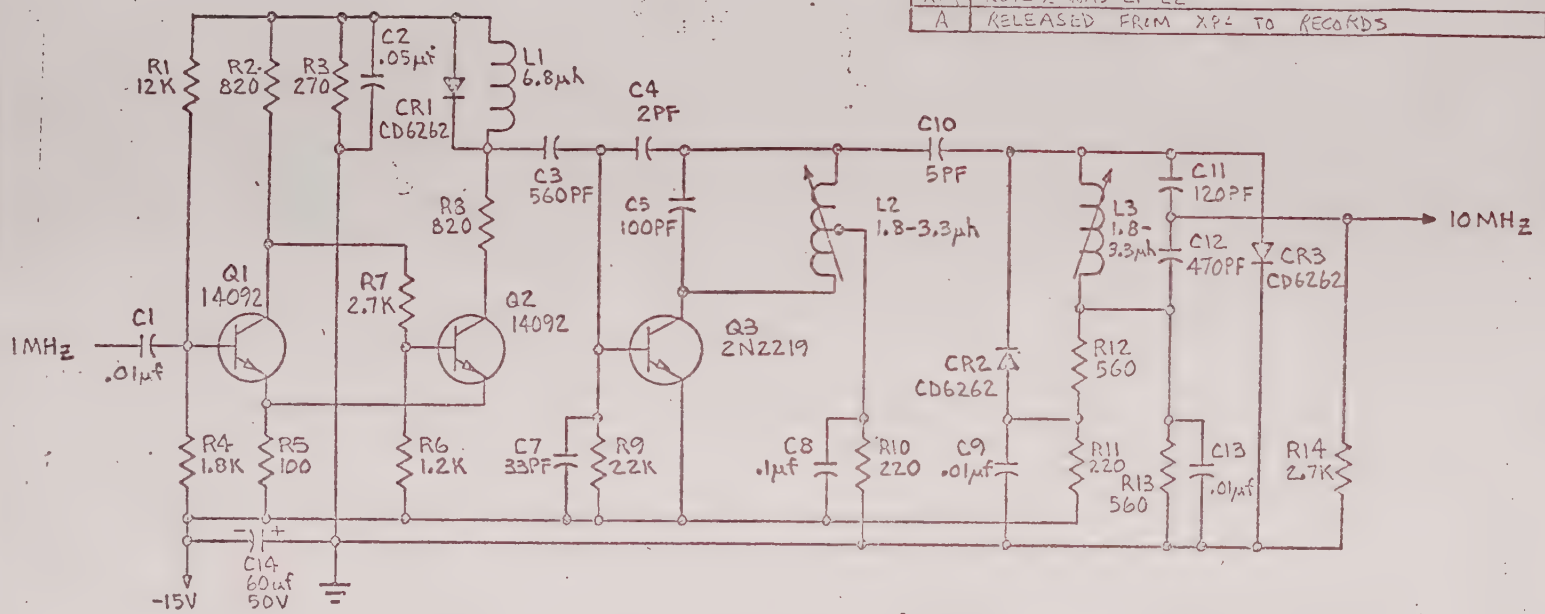


NOTE:
EXCEPT AS NOTED:
1) RESISTORS – IN OHMS, 1/4W, 5%.
2) L2 = 10T & 10T Nº 30 WIRE
L3 = 20T Nº 30 WIRE

| ITEM NO. | QTY. | PART NUMBER | DESCRIPTION | SCHEMATIC REF. NO. |
|---|---|---|---|---|

LIST OF MATERIALS

| | |
|---|---|
| 6000 | 19942 |
| USED ON | NEXT ASS'Y |
| APPLICATION | |

DRAWN 1-19-67 DATE
CHECK 2-3-67 DATE
ELECT. 12-1-67 DATE
MECH. 4-2-67 DATE
PROJECT 12-1-67 DATE
APPROVAL 12-1-67 DATE

UNLESS OTHERWISE SPECIFIED DIMENSIONS ARE IN INCHES
DECIMAL TOLERANCE
X
XX ~
XXX
ANGLES ±

SCALE ~ DO NOT SCALE DRAWING
DWG SIZE B
SH 1 OF 1

SYSTRON DONNER CORPORATION
CONCORD, CALIFORNIA

MATERIAL ~

SCHEMATIC, MULTIPLIER PC ASSEMBLY

DWG NO. 19727
ISSUE A

ENGINEERING USE ONLY

| ITEM NO. | PART NUMBER 1 2 3 4 5 6 7 | DESCRIPTION | REFERENCE | ASSY QTY | UNIT QTY |
|---|---|---|---|---|---|
| 1 | 019942 | MULTIPLIER P.C. ASSEMBLY | | X | X |
| 2 | | | | | |
| 3 | | SCHEMATIC | B 19727 | | |
| 4 | | | | | |
| 5 | | | | | |
| 6 | | | | | |
| 7 | | | | | |
| 8 | | | | | |
| 9 | | | | | |
| 10 | 100049 | CAPACITOR, .01 uf, 150V | C1, C9, C13 | 3 | 3 |
| 11 | 100122 | .05 uf, 12V | C2 | 1 | 1 |
| 12 | 100222 | 560 pf 300V | C3 | 1 | 1 |
| 13 | 100053 | 2 pf 500V Disc | C4 | 1 | 1 |
| 14 | 100175 | 33 pf, 500V | C7 | 1 | 1 |
| 15 | 100173 | 100 pf, 500V | C5 (NO CRIMP) | 1 | 1 |
| 16 | 100218 | 5 pf, 500V | C10 | 1 | 1 |
| 17 | 100223 | 120 pf, 500V | C11 [illegible] | 1 | 1 |
| 18 | 10022101 | 470 pf, 300V | C12 | 1 | 1 |
| 19 | 100069 | .1 uf, 200V | C8 | 1 | 1 |
| 20 | 100156 | 60 uf, 50V | C14 | 1 | 1 |
| 21 | | | | | |
| 22 | 100385 | DIODE, CD6262 | CR1, CR2, CR3 | 3 | 3 |
| 23 | | | | | |
| 24 | | | | | |
| 25 | 101566 | RESISTOR, 220Ω 1/4W 5% | R10, R11 | 2 | 2 |
| 26 | 101542 | 270Ω | R3 | 1 | 1 |
| 27 | 101583 | 560Ω | R12, R13, | 2 | 2 |
| 28 | | | | | |
| 29 | | | | | |
| 30 | 101567 | 820Ω | R2, R8 | 2 | 2 |
| 31 | 101581 | 1.2K | R6 | 1 | 1 |
| 32 | 101602 | 1.8K | R4 | 1 | 1 |
| 33 | 101599 | 2.7K | R7, R14 | 2 | 2 |
| 34 | 101563 | 12K | R1 | 1 | 1 |
| 35 | 101572 | 22K | R9 | 1 | 1 |
| 36 | 101609 | 100Ω | R5 | 1 | 1 |
| 37 | | | | | |
| 38 | | | | | |
| 39 | 101376 | TRANSISTOR, 2N2219 | Q3 | 1 | 1 |
| 40 | 014092 | SD14092 | Q1, Q2 | 2 | 2 |
| 41 | | | | | |
| 42 | | | | | |
| 43 | 101300 | CHOKE, 6.8 uh | L1 | 1 | 1 |
| 44 | 023249-2 | INDUCTOR, VARIABLE | L2 SEP PL23249-2 | 1 | 1 |
| 45 | 023249-1 | INDUCTOR, VARIABLE | L3 SEP PL23249-1 | 1 | 1 |
| 46 | 019729 | SPEC. P.C. BOARD | | 1 | 1 |
| 47 | | ARTWORK P.C. BOARD | C 19728 | | |
| 48 | 100666 | TRANSISTOR PAD | | 1 | 1 |
| 49 | 100517 | STANDOFF, SWAGE 1/8 LONG | | 2 | 2 |
| 50 | 100482 | TERMINAL | | 5 | 5 |

| REVISION | XCO 0387 | XCO 0388 | XCO 0392 | XCO 0405 | XCO 0432 | XCO 0508 | FINAL RELEASE |
|---|---|---|---|---|---|---|---|
| ISS. | XP2 | XP3 | XP4 | XP5 | XP6 | XP7 | A |

| Prepared | Checked | Approved |
|---|---|---|
| RB 12/18/66 | [illegible] 2-3-67 | [illegible] |

6000

USED ON | USED ON

SYSTRON DONNER CORPORATION

PARTS LIST FOR: MULTIPLIER P.C ASSY

PL 019942

ISSUE A

Sheet 1 of 1

SD Form E-1001-A

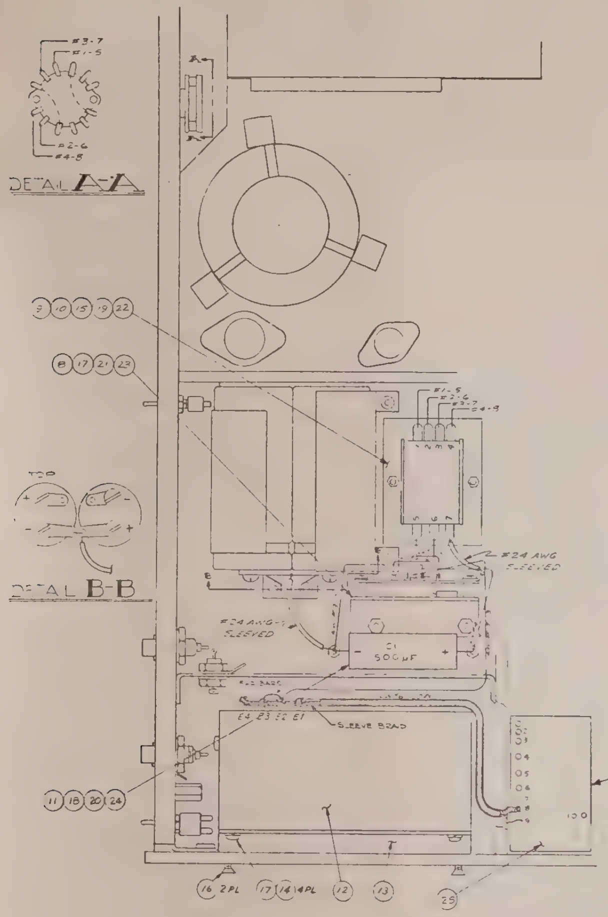


| TABULATION | | | |
|---|---|---|---|
| BASIC MODEL | BASIC ASSEMBLY | B4 OPTION MODEL | B4 OPTION ASSEMBLY |
| 6034 | 230[illegible]4 | [illegible]-B4 | [illegible] - 1 |
| 60[illegible]B | 23015 | [illegible] - B4 | 27228 - [illegible] |
| 6014 | 23014 | [illegible]4 - B4 | 27228 - 3 |
| 6316A | 25316 | 6316A-B4 | [illegible] - 4 |

| DELETE THE FOLLOWING WIRES | | |
|---|---|---|
| COLOR | [illegible] | [illegible] |
| 3 | [illegible] | [illegible] |
| 47 | PIN4 | PC BOARD |
| 915 | PIN5 | PC BOARD |
| 4 | PIN6 | TRANSFORMER PIN 4 |
| 90 | PIN8 | PC BOARD |

| HOOKUP FOR MODEL [illegible] | | | |
|---|---|---|---|
| WIRE | NUMBER | COLOR | PIN |
| COAX | 4[illegible] | 9 | [illegible] |
| | | 0 | 2 |
| TEFLON | 52 | 90 | 4 |
| COAX | 43 | 9 | 5 |
| | | 0 | 7 |
| COAX | 49 | 9 | 6 |
| | | 0 | 8 |
| TEFLON | 51 | 96 | [illegible] |

| HOOKUP FOR [illegible] | | | |
|---|---|---|---|
| WIRE | NUMBER | COLOR | PIN |
| COAX | 24 | 0 | 1 |
| | | 0 | 2 |
| COAX | 46 | 9 | 1 |
| | | 0 | 3 |
| TEFLON | 23 | 90 | 4 |
| COAX | 26 | 9 | 5 |
| | | 0 | 7 |
| COAX | 25 | 9 | 6 |
| | | 0 | 8 |
| TEFLON | 27 | 96 | 10 |

| HOOKUP FOR MODEL [illegible] | | | |
|---|---|---|---|
| WIRE | NUMBER | COLOR | PIN |
| COAX | 8 | [illegible] | |
| | | [illegible] | 2 |
| COAX | 34 | [illegible] | |
| | | [illegible] | 3 |
| COAX | 47 | 9 | |
| | | [illegible] | 4 |
| COAX | 46 | [illegible] | [illegible] |
| | | [illegible] | [illegible] |
| COAX | 45 | [illegible] | 6 |
| | | [illegible] | [illegible] |
| TEFLON | 49 | [illegible] | [illegible] |
| TEFLON | 49 | 96 | [illegible] |

NOTE:
1. ADD B4 TO NAME PLATE

| | | | | |
|---|---|---|---|---|
| A | RELEASED FOR M XP [illegible] TO RECORD | | | |
| B | [illegible] | | | |
| C | [illegible] | | | |
| D | [illegible] B5 TO B4 | | | |

| REF | FIND NO. | QTY | PART NUMBER | DESCRIPTION | SCHEMATIC REF NO. |
|---|---|---|---|---|---|
| | 27 | REF. | S 27387 | SCHEMATIC, B4 OPTION | |
| | [illegible] | 1 | [illegible] | LOOSE WIRE LIST | |
| | [illegible] | | 23110 | ADD [illegible] | |
| E0190 | [illegible] | [illegible] | 100507 | [illegible] | |
| H0380 | [illegible] | [illegible] | [illegible]0638 | [illegible] | |
| H0273 | [illegible] | [illegible] | [illegible] | [illegible] | |
| H0410 | [illegible] | [illegible] | 100647 | [illegible] | |
| H0610 | [illegible] | 2 | [illegible] | [illegible] | |
| H0734 | [illegible] | [illegible] | [illegible] | WASHER [illegible] | |
| H0933 | [illegible] | [illegible] | [illegible]2504 | SCREW [illegible] | |
| H[illegible] | [illegible] | [illegible] | [illegible] | [illegible] | |
| H0377 | [illegible] | 2 | 10073[illegible] | [illegible] | |
| H1766 | [illegible] | [illegible] | [illegible] | [illegible] | |
| | [illegible] | 4 | 100712 | WASHER, #6 [illegible] | |
| | [illegible] | 1 | B[illegible]555 | [illegible] BRACKET | |
| | [illegible] | | 033423-1 | [illegible] | |
| C1047 | 11 | | [illegible]00296 | [illegible] | C[illegible] |
| | [illegible] | 1 | [illegible] | TRANSFORMER | T2 |
| | 9 | 2 | A[illegible] | TRANSFORMER [illegible] | |
| | [illegible] | 1 | [illegible]2723 | ADD B4 [illegible] | |
| H0904 | 7 | 2 | 100645 | [illegible] | |
| [illegible] | [illegible] | | 102408 | [illegible] | |
| | 5 | | [illegible] | [illegible] | |
| | 4 | [illegible] | [illegible] | [illegible] | |
| | 3 | 1 | [illegible] | [illegible] | |
| Y0023 | [illegible] | 1 | [illegible]2451 | [illegible] | |
| | | [illegible] | [illegible] | [illegible] INSTRUMENT | |

LIST OF MATERIALS

SYSTRON-DONNER CORPORATION
CONCORD CALIFORNIA


PROPRIETARY DATA
Furnished under United States Government Contract No. [illegible] Shall not be [illegible]

RELEASED FROM XP 1 TO RECORDS

ADD ITEM 13 & MODEL 6038: ADD ITEM 14 & 15: CHANGE ITEM 2-1,710 TO 25731 & ITEM 3-1,711 TO 25732

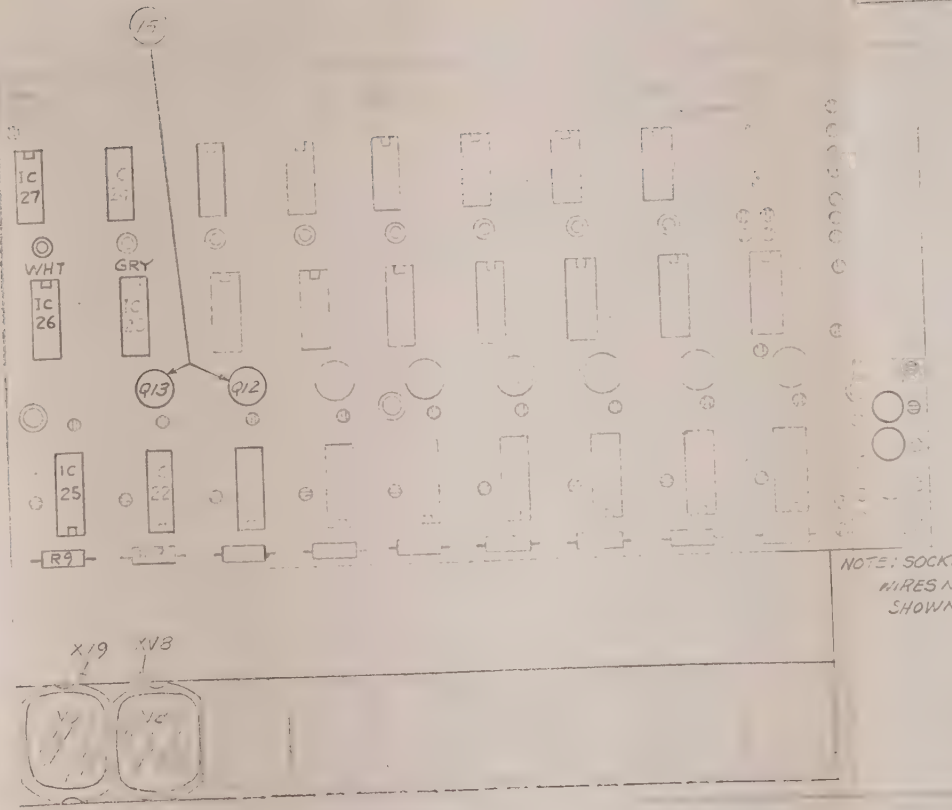


NOTE: SOCKET WIRES NOT SHOWN

4) REMOVE BLANKING STRIP BEHIND POLAROID.

| | | | | |
|---|---|---|---|---|
| 15 | 2 | 4-0515 | TRANSISTOR PAD | |
| 14 | 2 | 27313 | WIRE LIST | |
| 13 | 2 | [illegible] | TRANSISTOR | [illegible] |
| 12 | 1 | [illegible] | WASHER, INT. TOOTH #6 | |
| 11 | 1 | [illegible] | [illegible] | |
| 10 | 1 | [illegible] | [illegible] | |
| 9 | 1 | [illegible] | TEST POINT- [illegible] | 1 |
| | 1 | | [illegible] | |
| | 2 | R0232 | 39 | [illegible] |
| | 2 | | | [illegible] |
| | 2 | 25563 | | [illegible] |
| | 1 | [illegible] | [illegible] | 1 |
| | 2 | 25732 | | IC 24 |
| | 2 | 25731 | | [illegible] |
| | 2 | | | [illegible] |

1) [illegible] COMPONENTS [illegible]

2) DISCARD 6-32 x 3/4 BHMS & FIBER WASHS

[illegible]

[illegible] 6-10-68

[illegible] 6-10-68

[illegible] XX

CORPORATION

CONCORD, CALIFORNIA

6316A
6018
6038

25421

| A | ADDED GND JUMPERS ON FRONT PANEL | — | — | 1-22-74 |
|---|---|---|---|---|

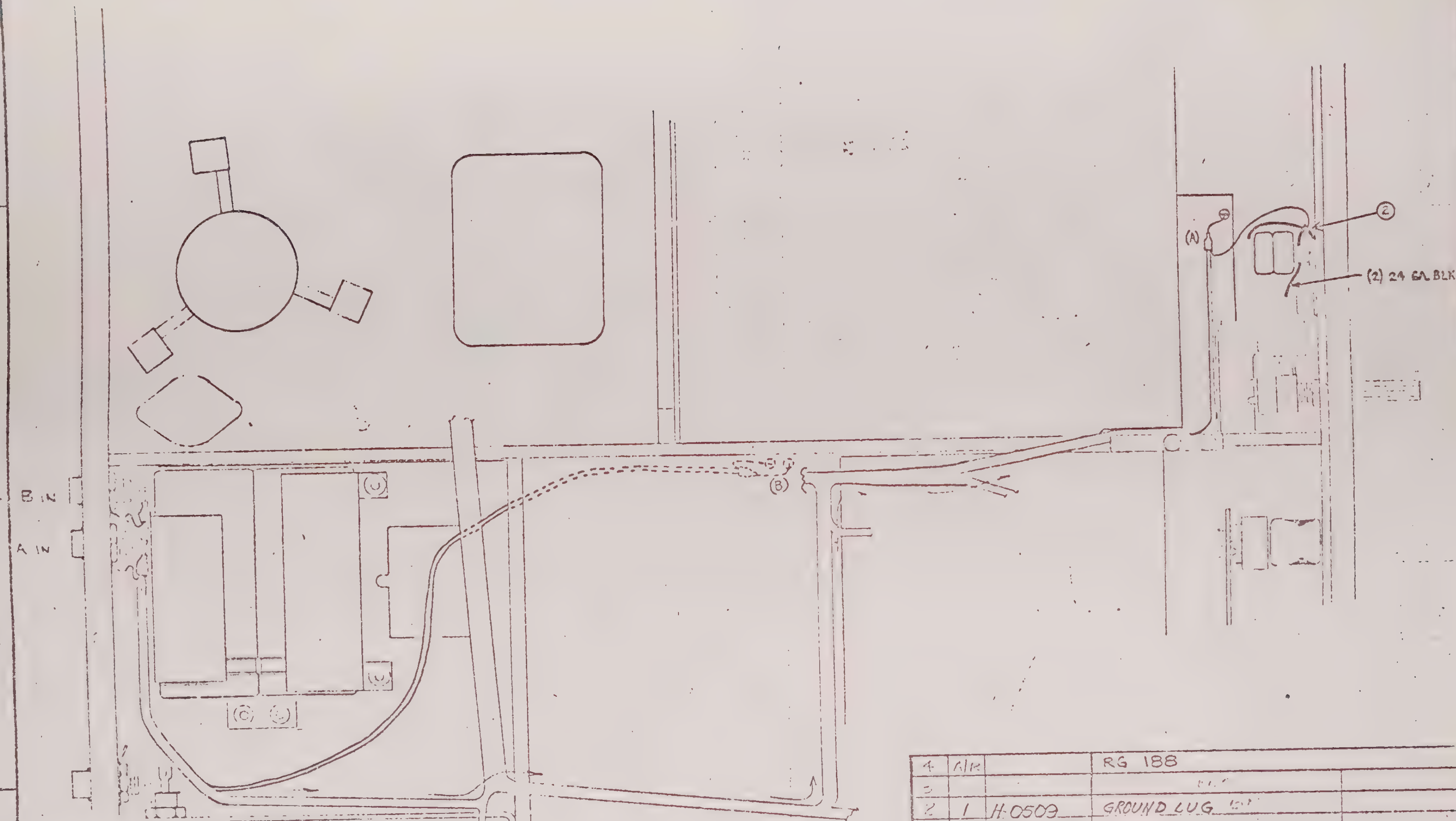


| ITEM NO | QTY | PART NUMBER | DESCRIPTION | SCHEMATIC REF NO |
|---|---|---|---|---|
| 4 | A/R | | RG 188 | |
| 3 | | | | |
| 2 | 1 | H-0509 | GROUND LUG | |
| 1 | REF | D25316 | 6316A FINAL ASSY | |

LIST OF MATERIALS

SYSTRON DONNER CORPORATION
CONCORD, CALIFORNIA

**RI OPTION ASSEMBLY**

DWG NO 49106 — ISSUE A

6316A-310

INSTALLATION PROCEDURE:

1. Remove front panel A & B input BNC's, and all associated hardware & wiring.
2. Remove (2) H-1667 snap buttons from rear panel input locations & reinstall at front panel.
3. Reinstall BNC's & ground lugs at rear panel.
4. Add ground lug (item 2) at preset switch.
5. Wire A input to lug 1 of 100MHz A amp.
6. Wire B input to lug 3 of 300MHz Prescaler.


PROPRIETARY DATA

Furnished under United States Government Contract No. ... Shall not be either released outside the Government, or used, duplicated, or disclosed in whole or in part for manufacture or procurement, without the written permission of Systron Donner Corporation ...

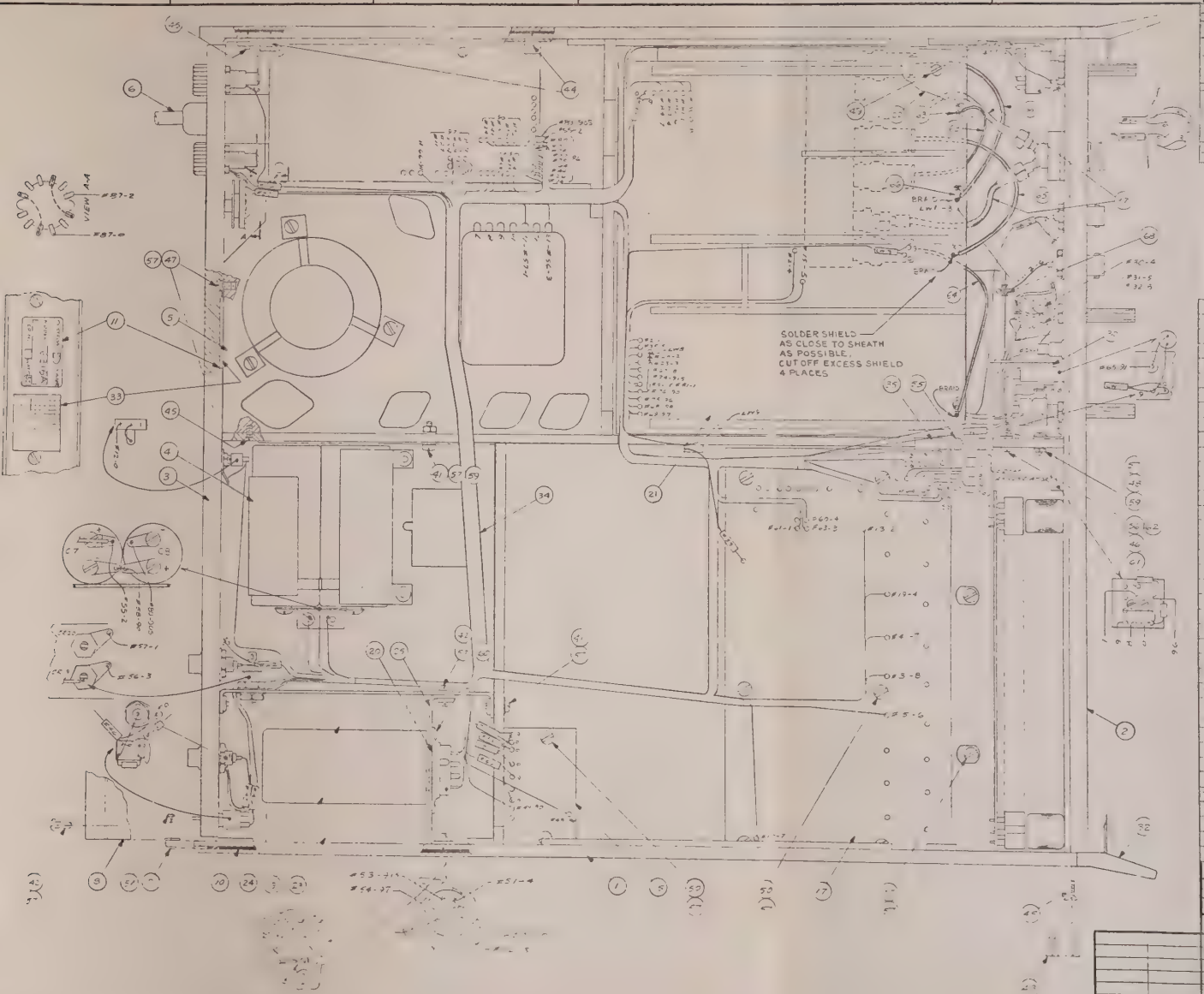


| ITEM NO | QTY | PART NUMBER | DESCRIPTION | SCHEMATIC REF NO |
|---|---|---|---|---|
| 40 | | | | |
| 39 | 1 | [illegible] | FRONT PANEL TRIM | |
| 38 | 1 | [illegible] | LOOSE WIRE LIST | LW1 TO LW12 |
| 37 | 2 | [illegible] | MIXER INPUT CABLE ASSY | |
| 36 | 2 | [illegible] | MIXER ASSEMBLY | |
| 35 | 2 | [illegible] | COVER RETAINER | |
| 34 | | [illegible] | MAIN CABLE HARNESS | WIRE LIST-25639 |
| 33 | 1 | [illegible] | RFI SC[illegible] REAR PANEL | |
| 32 | 2 | [illegible] | HANDLE | |
| 31 | 1 | 10[illegible]760 | SCREWDRIVER (NOT SHOWN) | |
| 30 | 1 | [illegible] | [illegible] | |
| 29 | | [illegible] | [illegible] | |
| 28 | | [illegible]-2 | FRONT PANEL SPACER | |
| 27 | | [illegible] | [illegible] | |
| 26 | | [illegible] | [illegible] | |
| 25 | | [illegible] | [illegible] | |
| 24 | | [illegible] | [illegible] | |
| 23 | | [illegible] | [illegible] | |
| 22 | | [illegible] | [illegible] | |
| 21 | | [illegible] | ACTO P.C ASSEMBLY | |
| 20 | | 102408 | SOCKET, 8 PIN OCTAL | |
| 19 | 1 | 102451 | OSCILLATOR | |
| 18 | | [illegible] | ASSEM[illegible] | |
| 17 | | [illegible] | [illegible] | |
| 16 | | [illegible] | [illegible] | |
| 15 | | [illegible] | [illegible] | |
| 14 | 1 | [illegible] | [illegible] ASSY | |
| 13 | 1 | [illegible] | [illegible] | |
| 12 | | [illegible] | SWITCH DETENT ASSEMBLY | |
| 11 | | [illegible] | NAMEPLATE | |
| 10 | 2 | [illegible] | SIDE TRIM | |
| 9 | 2 | [illegible] | TRIM STRIP RETAINER | |
| 8 | | [illegible] | TOP COVER ASSEMBLY | |
| 7 | | [illegible] | BOTTOM COVER ASSEMBLY | |
| 6 | | 102405 | [illegible] | |
| 5 | 1 | [illegible] | [illegible] ASSEMBLY | |
| 4 | 1 | [illegible] | [illegible] | |
| 3 | 1 | [illegible] | REAR PANEL ASSEMBLY | |
| 2 | 1 | [illegible] | [illegible] PANEL ASSEMBLY | |
| 1 | | [illegible] | [illegible] ASSEMBLY [illegible] | |

LIST OF MATERIALS

SYSTRON DONNER
CORPORATION
CONCORD CALIFORNIA

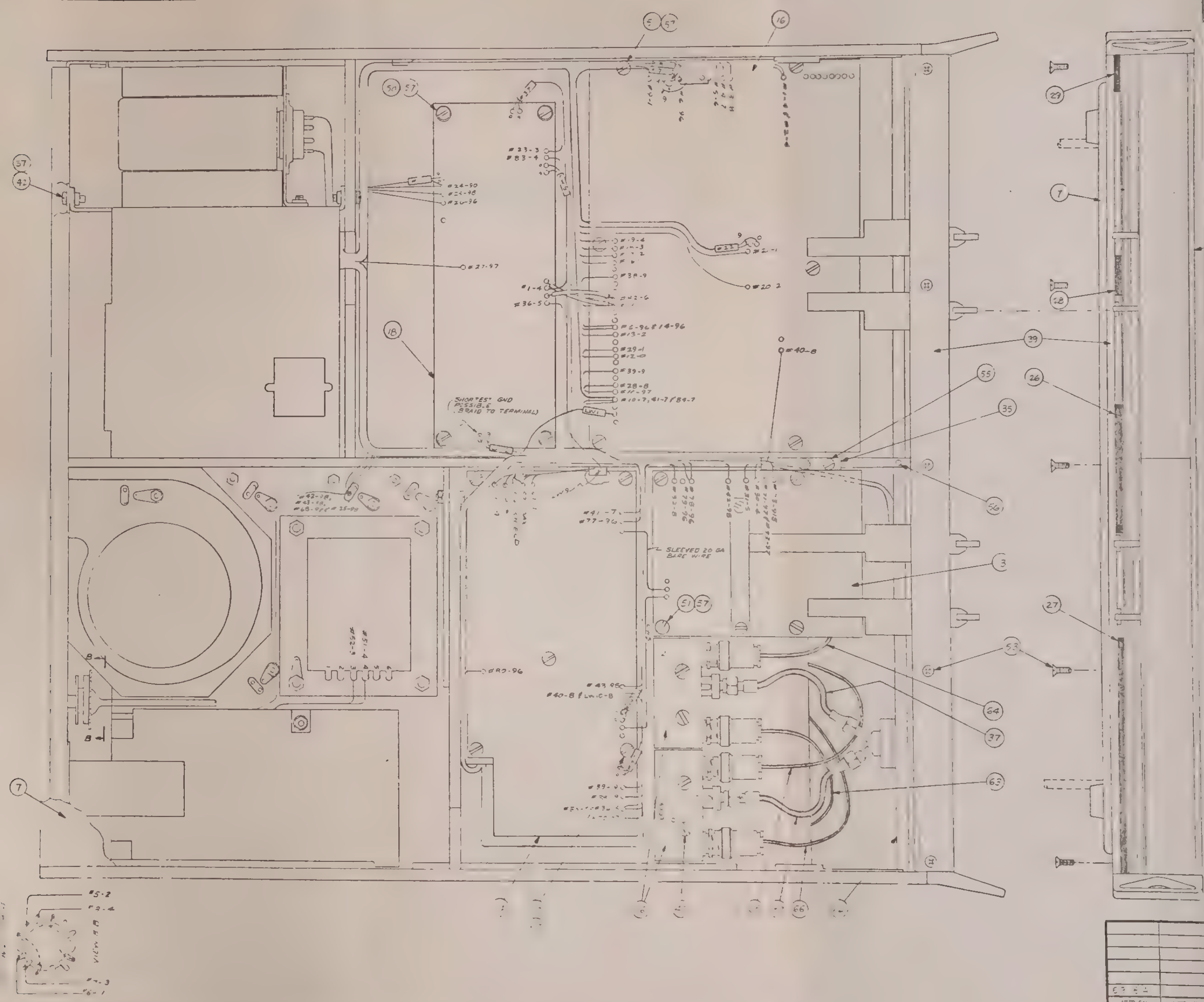


| | | | | |
|---|---|---|---|---|
| 74 | REF. | A 45533 | TEST DATA | |
| 73 | 1 | C33856 | RACK MOUNT KIT ASS'Y | |
| 72 | REF | A33049 | INSPECTION TEST PROCEDURE | |
| 71 | REF | 33814 | ACCEPTANCE TEST PROCEDURE | |
| 70 | 2 | 100134 | CAP. .05μF 100v DISC. | C5, C6 |
| 69 | 2 | 100075 | CAP. .01μF 500v DISC. | C3, C4 |
| [illegible] | | 100656 | [illegible] | |
| [illegible] | REF | [illegible] | [illegible] | |
| [illegible] | | [illegible] | [illegible] | |
| [illegible] | 1 | [illegible] | [illegible] | |
| [illegible] | | [illegible] | [illegible] | |
| [illegible] | | [illegible] | [illegible] | |
| [illegible] | 1 | [illegible] | [illegible] | |
| [illegible] | 2 | 100507 | [illegible] | |
| [illegible] | 2 | 100645 | [illegible] | |
| [illegible] | 4 | 100638 | [illegible] | |
| [illegible] | 2 | 100701 | [illegible] | |
| [illegible] | [illegible] | 100647 | [illegible] | |
| [illegible] | | 100613 | [illegible] | |
| [illegible] | 4 | 10072004 | [illegible] | |
| [illegible] | 2 | 10062603 | [illegible] | |
| [illegible] | 5 | 10072006 | [illegible] | |
| [illegible] | 1 | 100103 | CAPACITOR .01μF 100V | C2 |
| [illegible] | [illegible] | 100857 | [illegible] x 9/16 PHMS | |
| [illegible] | [illegible] | 10063207 | [illegible] PHMS | |
| [illegible] | 13 | 10063212 | [illegible] | |
| [illegible] | | 10063204 | [illegible] 4 PHMS | |
| [illegible] | 4 | 10063205 | [illegible] PHMS | |
| [illegible] | [illegible] | [illegible] | [illegible] | |
| [illegible] | 8 | [illegible] | [illegible] | |
| [illegible] | 2 | [illegible] | [illegible] | |
| [illegible] | 4 | [illegible] | [illegible] | |
| [illegible] | 4 | [illegible] | [illegible] | |
| [illegible] | [illegible] | [illegible] | [illegible] | |
| ITEM NO | QTY | PART NUMBER | DESCRIPTION | [illegible] |

## LIST OF MATERIALS

SYSTRON DONNER
CORPORATION
CONCORD CALIFORNIA

APPLICATION

# Concord Instrument Division

# INSTRUCTION MANUAL

MODEL 6316A/B
FREQUENCY METER

SERIAL NO.

© Copyright 1973 Systron-Donner Corporation

SYSTRON DONNER CORPORATION

TEN SYSTRON DRIVE, CONCORD, CALIFORNIA 94518 U.S.A.
Tel: (415) 682-6161, TWX: 910-481-9479, Cable: SYSTRONDONNER

SYSTRON DONNER

Instrument Division

10 Systron Drive • Concord, California 94518 • Phone (415) 825-9810 • TWX 910-481-9479

# Thank You.

We appreciate your confidence in our products. Systron-Donner wishes to ensure your on-going satisfaction with this instrument by maintaining it at its specified performance throughout its warranty period. If assistance is required, please feel free to contact one of our Factory, Regional or Local Service Centers listed on the reverse side of this card.

If service, calibration or parts are required beyond the warranty period, please contact the Service Center nearest you. They will insure your continuing satisfaction with our equipment.

To insure complete warranty coverage of this instrument and to help us serve you better, please complete the warranty registration card below and return it immediately.

Sincerely,

Neil Harrer

Neil A. Harrer
Product Manager, Customer Service

The Post Office will not deliver mail without proper postage

**Systron-Donner Corporation**
**Instrument Division**
**10 Systron Drive**
**Concord, CA 94518**

# S-D Service Centers

**Factory Service**

**INSTRUMENT DIVISION**
10 Systron Drive
Concord, CA 94518
*Phone:* (415) 825-9810
*TWX:* 910-481-9479

**REGIONAL SERVICE CENTERS**

**EAST**
115 Grand Avenue
Englewood, NJ 07631
*Phone:* (201) 871-3916
(201) 871-3917

**LOCAL SERVICE CENTERS**

**WASHINGTON, D.C.**
7643 Fullerton Road
Springfield, VA 22153
*Phone:* (703) 451-6500

**SOUTHWEST**
312 N. Central Expressway
Suite 212
Richardson, TX 75080
*Phone:* (214) 231-5693

# Warranty Registration Card

MODEL NO. _____ SERIAL NO. _____ DATE RCV'D _____

Company _____ Department _____

Name _____ Title _____

Address _____ Phone (_____) _____

City _____ State _____ Zip _____

| PRE-SALE ASSISTANCE | DELIVERY | INSTRUMENT PERFORMANCE | INSTRUMENT QUALITY |
|---|---|---|---|
| ☐ Excellent | ☐ Early | ☐ As Expected | ☐ Excellent |
| ☐ Fair | ☐ On Time | ☐ Good | ☐ Fair |
| ☐ Poor | ☐ Late | ☐ Defective | ☐ Poor |

**SERVICE CONTRACT AFTER WARRANTY?** ☐ Yes ☐ No ☐ Check Later

**PROVISIONING PARTS REQUIRED?** ☐ Yes ☐ No ☐ Check Later

**THIS EQUIPMENT WAS TO:** ☐ Replace existing instrument ☐ Expand equipment capability

**WHAT INFLUENCED YOUR DECISION TO BUY?** ☐ Advertising ☐ Salesman ☐ Other

**COMMENTS:** _____

SYSTRON DONNER

CORPORATION

# WARRANTY

Systron-Donner instruments are warranted during a period of one year from date of shipment to original purchaser to be free from defects in material and workmanship. This warranty does not apply to vacuum tubes, except as these are warranted by tube manufacturers. The liability of Seller under this warranty is limited to replacing or repairing any instrument or component thereof which is returned by Buyer, at his expense, during such period and which has not been subjected to misuse, neglect, improper installation, repair, alteration, or accident. Seller shall have the right to final determination as to the existence and cause of a defect. In no event shall Seller be liable for collateral or consequential damages. This warranty is in lieu of any other warranty, expressed, implied, or statutory; and no agreement extending or modifying it will be binding upon Seller unless in writing and signed by a duly authorized officer.

# RECEIVING INSPECTION

Every Systron-Donner instrument is carefully inspected and is in perfect working order at the time of shipment. Each instrument should be checked as soon as received. If the unit is damaged in any way, or fails to operate, a claim should immediately be filed with the transportation company.

# REPAIRS

Whenever a Systron-Donner instrument requires service, the nearest Systron-Donner representative should be contacted; all representatives will provide immediate service or arrange factory returns when necessary.

Please specify both model and serial number in all correspondence concerning Systron-Donner instruments. Address all inquiries on operation or applications to your nearest sales representative; or, Sales Manager, Concord Instrument Division, Systron-Donner Corporation, 10 Systron Drive, Concord, California 94518.

Change Information:

Make the following changes as per ECO 9807.

1. To Schematic 100 MHz Input Amplifier #39026
   Change C2 from 100 pF to 680 pF.

   To PC Assembly 100 MHz Input Amplifier #39026
   Change C2 from 100 pF to 680 pF.

   To Parts List 100 MHz Input Amplifier P.C. Assembly
   Change C2 Capacitor, 100 pF, 500V, DM C0874
   to read C2 Capacitor, 680 pF, 500V, DM 100275

2. To Schematic 6000 Series Power Supply #19735
   Change C3 from 470 pF to 1000 pF.

   To pages vii, x, Addendum page 3 of 12, page 4-1 Fig. 4-1, 4-29, 6-1, 6-2, 6-4, 8-8, and 8-12.
   Change reference to #39467 or #19734 for the PC Assembly to #39464.

   To PC Assembly Power Supply #39464
   Change C3 from 470 pF to 1000 pF.

   To Parts List Power Supply PC Assembly
   Change C3 Capacitor, 470 pF 300V C0542
   to read C3 Capacitor, 1000 pF 300V 10024301 Elmenco DM15FA102J0

SYSTRON DONNER CORPORATION

# ADDENDUM

MODEL 6316A

Delete the calibration procedures, Paragraphs 5.4.3 and 5.4.4 of Chapter 5, and add the following:

STEP 5.4.3 100 MHz Input Amplifier - P/N 33262

A) Place the range switch in the "0-.1 GHz" range and the level control to PRESET. Connect lug 10 to ground.

B) With the Dvm monitor the drains of Q9 and Q12 at R17 and R18 respectively, Adjust R27 for equal voltage (±5 MV) at these points (approximately -6.2V). (NOTE: Step B is a preliminary adjustment only.)

C) Adjust R50 for zero volts at lug 9 (±5 MV). Remove the ground from lug 10 and adjust R27 for zero volts (±5 MV) at lug 9.

D) Check the drains of Q9 and Q12 to make sure that they are still equal. If not, repeat alignment procedure. (NOTE: R34 and associated circuitry are not used in the 6316.)

STEP 5.4.4 100 MHz Amplifier and Decade - P/N 33288

A) With range switch in "0-.1 GHz" and the level control in PRESET, the voltage at the junction of S1, S2, and S3 should be zero. If not, align the input amplifier.

B) Place the range switch to TEST and adjust R2 for zero volts at S1, S2, S3 junction.

C) Monitor the collector of Q1 with DVM and adjust R5 for +1.5V (±5 MV).

D) Place range switch to "0-.1 GHz" and apply 100 MHz at 100 MV to "0-.1 GHz" input connector. With sampling 0-scope (or 100 MHz 0-scope), observe the junction of S1, S2, S3 for waveform #1.

E) Observe the collector of Q1 for waveform #2.

F) Observe Q5 emitter for waveform #3. (A slight adjustment of R5 may be necessary.)

G) Observe Q7 collector and adjust R23 for waveform #4.

H) Observe Q13 emitter for waveform #5 (Binary should be dividing by two.)

I) Observe Q13 collector for waveform #6. If necessary, adjust the value of R53 so that the positive peak is within 400 MV of ground. Recheck step G if R53 is changed.

J) Observe lug 2 for a 10 MHz ≈4V signal.

K) Remove all test equipment and observe correct readout display. Gradually decrease input amplitude from generator and adjust R5 for best sensitivity (generally 70 MV).

L) Remove the input, turn the storage switch off, and put the resolution switch in REMOTE making sure that the gate lamp remains on. Rotate the level control back and forth and watch the first indicator sequence one count each time. If there is any discrepancy, repeat the alignment procedure.

When the resolution switch is in the 10Hz, 1Hz, or the 0.1Hz position the period of time required for each measurement may be excessively long.

When measuring 10GHz, for example, with the resolution switch in the 1.0Hz position the measurement time will be more than 1.6 minutes. Because of the digital logic in the "N" computer the first reading after turning power on or changing the resolution switch to this position may take even longer.

SYSTRON DONNER CORPORATION

# ADDENDUM

MODEL 6316A

Modify the following sections on Pages 5-4 and 5-5 to Read:

to the .1-.3 GHz input connector and set for 310 MHz at 150 mV rms. On the 300 MHz Prescaler board:

✓ Turn R21 to midrange, and R59 fully ccw.

✓ Return R59 slowly cw until instrument reads correctly.

✓ Reduce amplitude of generator signal gradually while adjusting R21 for maximum signal.

✓ Tune the signal generator over the full .1 to .3 GHz ranges with signal level at greater than 1V rms. If readings are erratic, readjust R59 ccw to correct.

Readings should be correct over the full range at signal levels between 100 mV and 2V.

5.4.6 .3-3 GHz and 3-12.4 GHz ACTO Ranges (Remove ACTO assembly cover, reinstall center cover screw). N Computer Test

a) Place RANGE switch in TEST position and the RESOLUTION switch in the 1k position. Remove the green wire from Terminal 13 and ground TP1 on the ACTO assembly. Verify a readout of 000.257000 GHz.

b) Ground TP4 (on 6316 only, also ground Terminals 15 & 16). Jumper the +5V buss line to TP6. Place RESOLUTION switch to 100k. Place RANGE switch to "Test". With scope, check IC1-12 for inverse signal seen at Terminal 14.

c) IC1 thru IC8 are J-K flop-flops which divide by two. Check Pin 8 of IC1 thru IC8 for 1/2 frequency seen at previous stage. (Signals should be 0 to +4V). Any discrepancies will be caused by the flip-flop or its associated gates.

d) Connect the oscilloscope (Items #2 & 3) to TP3 on the ACTO assembly. Verify a positive 4 msec gate occurs once every counter recycle.

e) Replace the wire on Terminal 13. Verify normal counter operation, 1 MHz Amplifier Adjustment.

f) Connect the oscilloscope (Items 2 & 3) to the collector of Q9 (of junction of C135/L31). Adjust C58 for maximum amplitude of the 1 MHz signal. (4V p-p).

g) Check for presence of the 1 MHz signal at the collectors of Q7 (2-3V p-p) and Q8 (3-4V p-p).

ACTO LOCAL OSCILLATOR ADJUSTMENTS

h) Place the RANGE switch in the 3-12.4 GHz position, and the RESOLUTION switch in the 1M position. Ground TP1 and TP2 on the ACTO assembly.

i) The counter will display the frequency of the high range (3-12.4 GHz) ACTO oscillator, multiplied by 257. Adjust L17 until the counter reads 000024.350 ±.01 GHz.

j) Change the RANGE switch to the .3-3 GHz position, and ground TP1 and TP2 on the ACTO assembly.

k) The counter will display the frequency of the low range (.3-3 GHz) ACTO oscillator, multiplied by 257. Adjust L14 until the counter reads 000007.335 ±.01 GHz.

l) Remove the ground connections to TP1 and TP2. 1 kHz Amplifier and Phase Shift Network.

m) Connect the oscilloscope (Items 2 & 3) to the collector of Q27. Verify a 1 kHz sinewave 1.75V ±0.25V p-p (If incorrect, change R88 to appropriate value).

n) Connect the oscilloscope external trigger to TP8 on the Frequency Function assembly.

o) Using dual trace, monitor the 1 kHz signals on the positive ends of C93 and C94. Verify approximately equal ac & dc level, and 90° phase difference. Repeat at C92 & C95.

p) Place RANGE switch in the 3-12.4 GHz position connect TP2 to the oscilloscope (Items 2 & 3) horizontal input, and ACTO assembly Terminal 1 to the vertical input (use short ground connection at the probe end). Adjust T9 for maximum amplitude and flatness of trace.

q) Place RANGE switch in the .3-3 GHz position, adjust T8 for maximum amplitude and flatness to trace.

r) Place the RANGE switch in the 3-12.4 GHz position, and the RESOLUTION switch to 1k. Rotate the LEVEL/SENSITIVITY control maximum ccw.

s) Connect a signal generator (Item 5 to the 3-12.4 GHz input and set to 10.0 GHz at -7 dBm (100 mV rms). Connect the oscilloscope vertical input to TP1 on the ACTO assembly, and external trigger to TP8 on the Frequency Function assembly.

t) Slowly rotate the LEVEL/SENSITIVITY control cw until LOK light comes on to indicate that the ACTO has locked on the input signal. Observe "1 kHz x N" signal on the oscilloscope. Adjust C112 for minimum phase modulation.

u) Rotate the LEVEL/SENSITIVITY control ccw. Remove 10 GHz signal generator input and replace with 300 MHz signal from Item 4 signal generator, at -7 dBm (100 mV rms).

v) Turn LEVEL/SENSITIVITY control cw until ACTO locks on to input signal (LOK light on). Observe the "1 kHz x N" signal on the oscilloscope. Adjust C100 for minimum phase modulation.

w) Replace signal generator with Item 5. Tune slowly from 10.0 GHz to 12.4 GHz at -7 dBm. Varify that the ACTO tracks the inpút correctly.

5.4.7 Remove all test leads and replace ACTO cover. Place the RANGE switch to TEST and the RECYCLE switch to ∞. Push RESET button and observe that the counter recycles.

# LIST OF EFFECTIVE PAGES

| | PAGES | REVISION |
|---|---|---|
| Front Matter | i to iii | Original |
| Blank | iv | Original |
| Front Matter | v to xi | Original |
| Blank | xii | Original |
| Chapter 1 | 1-1 to 1-3 | Original |
| Blank | 1-4 | Original |
| Chapter 2 | 2-1 to 2-2 | Original |
| Chapter 3 | 3-1 to 3-11 | Original |
| Blank | 3-12 | Original |
| Chapter 4 | 4-1 to 4-30 | Original |
| Chapter 5 | 5-1 to 5-19 | Original |
| Blank | 5-20 | Original |
| Chapter 6 | 6-1 to 6-40 | Original |
| Blank | 6-41 | Original |
| Chapter 6 | 6-42 to 6-46 | Original |
| Blank | 6-47 | Original |
| Chapter 6 | 6-48 to 6-51 | Original |
| Blank | 6-52 | Original |
| Chapter 7 | 7-1 to 7-32 | Original |

# ADDENDUM

When the resolution switch is in the 10 Hz, 1Hz, or the 0.1 Hz position the period of time required for each measurement may be excessively long.

When measuring 10GHz, for example, with the resolution switch in the 1.0Hz position the measurement time will be more than 1.6 minutes. Because of the digital logic in the "N" computer the first reading after turning power on or changing the resolution switch to this position may take even longer.

# CONTENTS


| | | | PAGE |
|---|---|---|---|
| CHAPTER 1 | GENERAL DESCRIPTION | | |
| | 1.1 | Introduction | 1-1 |
| | 1.2 | Functional Description | 1-1 |
| | 1.3 | Specifications | 1-1 |
| | 1.3.1 | Direct Count Range | 1-1 |
| | 1.3.2 | Pre-Scaler Range | 1-2 |
| | 1.3.3 | ACTO Range | 1-2 |
| | 1.3.4 | Time Base | 1-2 |
| | 1.3.5 | General | 1-2 |
| | 1.4 | Optional Features | 1-3 |
| CHAPTER 2 | INSTALLATION | | |
| | 2.1 | Introduction | 2-1 |
| | 2.2 | Receiving Inspection | 2-1 |
| | 2.3 | Installation | 2-1 |
| | 2.3.1 | Power | 2-1 |
| | 2.3.2 | Cooling | 2-1 |
| | 2.4 | Storage and Reshipment | 2-1 |
| CHAPTER 3 | OPERATION | | |
| | 3.1 | General | 3-1 |
| | 3.2 | Controls, Connectors, & Indicators | 3-1 |
| | 3.2.1 | Front Panel Description | 3-1 |
| | 3.2.2 | Rear Panel Description | 3-3 |
| | 3.3 | Initial Turn-On and Operational Checks | 3-5 |
| | 3.3.1 | Initial Functional Test | 3-5 |
| | 3.3.2 | 0-.1 GHz Direct Counting Mode Operational Check | 3-6 |
| | 3.3.3 | .1-.3 GHz Prescaler Counting Mode Operational Check | 3-7 |
| | 3.3.4 | .3-12 GHz ACTO Counting Mode Operational Check | 3-8 |
| | 3.4 | Operating Procedures | 3-9 |
| | 3.5 | Applications | 3-9 |
| | 3.6 | Operating Notes | 3-9 |
| | 3.6.1 | Measurement Accuracies | 3-9 |
| | 3.6.2 | Oscillator Stability | 3-9 |
| | 3.6.3 | Gating Error | 3-10 |
| | 3.6.4 | Count Error Due to Noise | 3-10 |
| | 3.6.5 | Loading Error | 3-11 |

CHAPTER 4 PRINCIPLES OF OPERATION


| | | PAGE |
|---|---|---|
| 4.1 | Introduction | 4-1 |
| 4.2 | General Theory | 4-1 |
| 4.3 | Circuit Descriptions | 4-3 |
| 4.3.1 | 100 MHz A & B Amplifier | 4-3 |
| 4.3.2 | 300 MHz Prescaler | 4-5 |
| 4.3.3 | .3-12.4 GHz ACTO | 4-8 |
| 4.3.4 | Frequency Function | 4-19 |
| 4.3.5 | 100 MHz Amplifier and Decade | 4-22 |
| 4.3.6 | Count Chain and Readout | 4-25 |
| 4.3.7 | 1 MHz Oscillator-Shaper | 4-27 |
| 4.3.8 | Power Supply | 4-29 |


CHAPTER 5 MAINTENANCE AND REPAIR


| | | |
|---|---|---|
| 5.1 | Introduction | 5-1 |
| 5.2 | Factory Service | 5-1 |
| 5.3 | Test Equipment | 5-1 |
| 5.4 | Calibration and Test Procedures | 5-2 |
| 5.4.1 | AC and Power Supply | 5-2 |
| 5.4.2 | Oscillator and Shaper | 5-2 |
| 5.4.3 | 100 MHz Amplifier | 5-3 |
| 5.4.4 | 0-.1 GHz Range | 5-3 |
| 5.4.5 | .1-.2 GHz Range | 5-3 |
| 5.4.6 | .3-3 GHz and 3-12.4 GHz ACTO | 5-4 |
| 5.4.7 | Remove and Replace | 5-5 |
| 5.5 | Repair Procedures | 5-5 |
| 5.5.1 | Preventive Maintenance | 5-5 |
| 5.5.2 | Printed Circuit Board Repair | 5-5 |
| 5.5.3 | Troubleshooting Procedures | 5-6 |
| | CA3011, CA3012 Wide Band Amplifiers | 5-8 |
| | CA3028A, CA3028B Differential/Cascode Amplifiers | 5-8 |
| | MC1018 MC1218 MECL-To-Saturated Logic Translators | 5-9 |
| | MC1023 Dual 4-Input Clock Driver | 5-10 |
| | MC1027 120-MHz AC Coupled J-K Flip-Flops | 5-11 |
| | Type SN15 832 Dual 4-Input NAND/NOR Buffers | 5-13 |
| | Type SN15 846 Quadruple 2-Input NAND/NOR Gate | 5-13 |
| | Type SN15 962 Triple 3-Input NAND/NOR Gate | 5-14 |
| | Type SN7400 Quadruple 2-Input Positive NAND Gate | 5-14 |
| | Type SN7410 Tripple 3-Input Positive NAND Gate | 5-14 |
| | Circuit Type SN7441A BCD-To-Decimal DECODER/DRIVER | 5-15 |
| | Circuit Types SN5470, SN7470 Edge-Triggered J-K Flip-Flops | 5-16 |

CHAPTER 5 MAINTENANCE AND REPAIR (Con't.) PAGE

Circuit Type SN7473 Dual J-K Master-Slave Flip-Flops . . . . . 5-17
Circuit Type SN7475 4-Bill Bistable Latches . . . . 5-18
Circuit Types SN5490, SN7490 Decade Counters . . . . 5-19

CHAPTER 6 DRAWINGS AND PARTS LISTS

| | | |
|---|---|---|
| 25580D | Figure 6-1. Block Diagram Model 6316A. . . . . | 6-1 |
| 19938 | Figure 6-2. Power Supply P.C. Assembly . . . . . | 6-2 |
| 19735 | Figure 6-3. Schematic Power Supply 6000 Series . . . | 6-3 |
| 19938 | Power Supply Parts List . . . . . | 6-4 |
| 33262 | Figure 6-4. Assembly 100 MHz A-Amplifier . . . . . | 6-6 |
| 33295 | Figure 6-5. Schematic 100 MHz A-Amplifier. . . . . | 6-7 |
| 33262 | 100 MHz "A" Amp Parts List. . . . . | 6-8 |
| 33288 | Figure 6-6. Assembly 100 MHz Amp & Decade. . . . . | 6-12 |
| 33285A | Figure 6-7. Schematic 100 MHz Amp & Decade . . . . . | 6-13 |
| 33288 | 100 MHz Amp & Decade P.C. Assembly Parts List . . . . | 6-14 |
| 23733B | Figure 6-8. ACTO . . . . . | 6-18 |
| 23730 | Figure 6-9. Schematic ACTO P.C. Assembly . . . . . | 6-19 |
| 23730 | Figure 6-10. Schematic ACTO Sheet 2. . . . . | 6-20 |
| 23730 | Figure 6-11. Schematic ACTO P.C. Assembly Sheet 3. . | 6-21 |
| 23733 | ACTO P.C. Board Parts List. . . . . | 6-22 |
| 25189C | Figure 6-12. 300 MHz Prescaler . . . . . | 6-32 |
| 25186 | Figure 6-13. Schematic 300 MHz Prescaler . . . . . | 6-33 |
| 25189 | 300 MHz Prescaler Parts List. . . . . | 6-34 |
| 19943D | Figure 6-14. 1 MHz (Shaped) Assembly . . . . . | 6-38 |
| 23388 | Figure 6-15. Schematic 1 MHz (Shaped) Assembly . . . | 6-39 |
| 19943 | 1 MHz P.C. Assembly Parts List. . . . . | 6-40 |
| 19941C | Figure 6-16. Frequency Function. . . . . | 6-42 |
| 23388 | Figure 6-17. Schematic Frequency Function P.C. Assembly . . . . . | 6-43 |
| 19941 | Frequency Function Parts List . . . . . | 6-44 |
| 19939D | Figure 6-18. 9 Digit P.C. Assembly . . . . . | 6-48 |
| 23197D | Figure 6-19. Schematic 9 Digit P.C. Assembly . . . . | 6-49 |
| 19939D | 9 Digit P.C. Assembly Parts List. . . . . | 6-50 |

CHAPTER 7 OPTIONS

| | | |
|---|---|---|
| 7.1 | Introduction . . . . . | 7-1 |
| 7.2 | Oscillator Options . . . . . | 7-1 |
| 7.2.1 | Medium Stability "B3" Oscillator . . . . . | 7-1 |
| 7.2.2 | High Stability "B" Oscillator . . . . . | 7-1 |
| 7.2.3 | High Stability "B5" Oscillator . . . . . | 7-2 |

CHAPTER 7 OPTIONS (Con't.)


| | | PAGE |
|---|---|---|
| 7.3 | BCD Options | 7-2 |
| 7.3.1 | "D1" BCD Option | 7-2 |
| 7.3.2 | "D3" BCD Option | 7-3 |
| 7.4 | Remote Control "P" Option | 7-4 |
| 7.5 | Rear Panel Input Connectors, "R1" Option | 7-5 |
| 25667 | Figure 7-1. B3 Option Schematic | 7-6 |
| 25262 | Figure 7-2. B3 High Stability Oscillator Assembly | 7-7 |
| 25666 | Figure 7-3. B3 Option Schematic | 7-6 |
| 25618 | Figure 7-4. B Option Schematic | 7-9 |
| 19786 | Figure 7-5. B Option Power Supply | 7-10 |
| 19805 | Figure 7-6. B Option Transformer | 7-11 |
| 19376 | Figure 7-7. B High Stability Oscillator | 7-12 |
| 25610 | Figure 7-8. B Option Final Assembly | 7-13 |
| 19783 | B Option Power Supply P.C. Assembly Parts List | 7-14 |
| 27387 | Figure 7-9. B5 Option Schematic | 7-15 |
| 27720 | Figure 7-10. B5 Regulator Assembly | 7-16 |
| 27217 | Figure 7-11. B5 Regulator Schematic | 7-17 |
| 23477 | Figure 7-12. B5 High Stability Oscillator | 7-18 |
| 27228 | Figure 7-13. B5 Option Final Assembly | 7-19 |
| 27217 | B5 Regulator P.C. Assembly Parts List | 7-20 |
| 23110 | Figure 7-14. ÷3 1 MHz P.C. Assembly | 7-21 |
| 23112 | Figure 7-15. ÷3 1 MHz P.C. Schematic | 7-22 |
| 23112 | ÷3 1 MHz P.C. Assembly Parts List | 7-23 |
| 23454 | Figure 7-16. D1 Option Schematic | 7-24 |
| 23874 | Figure 7-17. D1 Option Assembly | 7-25 |
| 23893 | Figure 7-18. D1 Option Final Assembly | 7-26 |
| 23454 | D1 Option P.C. Board Assembly Parts List | 7-27 |
| S29436 | Figure 7-19. D3 Option Schematic | 7-28 |
| S29439 | Figure 7-21. D3 Option P.C. Assembly | 7-30 |
| S29444 | Figure 7-22. D3 Option Final Assembly | 7-31 |
| S29436 | D3 Option P.C. Board Assembly Parts List | 7-32 |

# LIST OF FIGURES AND SCHEMATICS


| FIGURE NO. | SCHEMATIC NO. | DESCRIPTION | PAGE |
|---|---|---|---|
| 3-1 | | Model 6316A Front Panel. | 3-1 |
| 3-2 | | Model 6316A Rear Panel | 3-3 |
| 3-3 | | Model 6316A Block Diagram. | 3-5 |
| 3-4 | | Model 6316A Block Diagram Direct Counting Mode Highlighted. | 3-6 |
| 3-5 | | Model 6316A Block Diagram Prescaler Counting Mode Highlighted | 3-7 |
| 3-6 | | Model 6316A Block Diagram ACTO Counting Mode Highlighted. | 3-8 |
| 3-7 | | Gating Error | 3-10 |
| 3-8 | | Count Error Due to Noise | 3-10 |
| 4-1 | 25583 | Block Diagram Model 6316A | 4-1 |
| 4-2 | | 100 MHz A Amplifier, Location | 4-3 |
| 4-3 | | 100 MHz A & B Amplifier, Block Diagram | 4-4 |
| 4-4 | | 300 MHz Prescaler, Location | 4-5 |
| 4-5 | | 300 MHz Prescaler, Block Diagram | 4-6 |
| 4-6 | | Tunnel Diode Curve | 4-8 |
| 4-7 | | .3-12.4 GHz ACTO, Location | 4-8 |
| 4-8 | | .2-12.4 GHz ACTO, Basic Block Diagram | 4-9 |
| 4-9 | | ACTO Phase Lock Channel, Block Diagram | 4-9 |
| 4-10 | | ACTO N-Channel, Block Diagram | 4-10 |
| 4-11 | | ACTO N-Compute, Block Diagram | 4-10 |
| 4-12 | | Sweep Oscillator, Schematic | 4-12 |
| 4-13 | | Sweep Oscillator, Wave Form | 4-12 |
| 4-14 | | Voltage Controlled Oscillator, Schematic | 4-13 |
| 4-15 | | Single Side Band Generator (SSB), Schematic | 4-14 |
| 4-16 | | Rotating Phase Relationship, Wave Form | 4-15 |
| 4-17 | | "Phase Lock" Phase Detector, Schematic | 4-16 |
| 4-18 | | Zero Beat Phase Lock, Wave Form | 4-17 |
| 4-18a | | Zero Beat Before Phase Lock, Wave Form | 4-17 |
| 4-18b | | Zero Beat After Phase Lock, Wave Form | 4-17 |
| 4-19 | | Frequency Function Board, Location | 4-19 |
| 4-20 | | Frequency Function Board, Block Diagram | 4-20 |
| 4-21 | | Frequency Function Board, Wave Forms | 4-21 |
| 4-22 | | 100 MHz Amplifier & Decade, Location | 4-22 |
| 4-23 | | 100 MHz Amplifier & Decade, Block Diagram | 4-23 |
| 4-24 | | 100 MHz Amplifier & Decade, Wave Forms | 4-24 |
| 4-25 | | Count Chain and Readout, Location | 4-25 |
| 4-26 | | 1 MHz Oscillator-Shaper, Location | 4-27 |

## LIST OF FIGURES AND SCHEMATICS (Con't.)


| FIGURE NO. | SCHEMATIC NO. | DESCRIPTION | PAGE |
|---|---|---|---|
| 4-27 | | 1 MHz Oscillator-Shaper, Wave Forms | 4-28 |
| 4-28 | | Power Supply, Location | 4-29 |
| 5-1 | | Oscillator and Shaper | 5-2 |
| 5-2 | | Frequency Shifter Wave Forms | 5-5 |
| 6-1 | 25580D | Block Diagram Model 6316A. | 6-1 |
| 6-2 | 19938 | Power Supply P.C. Assembly | 6-2 |
| 6-3 | 19735 | Schematic Power Supply 6000 Series | 6-3 |
| 6-4 | 33262 | Assembly 100 MHz A-Amplifier | 6-6 |
| 6-5 | 33295 | Schematic 100 MHz A-Amplifier. | 6-7 |
| 6-6 | 33288 | Assembly 100 MHz Amp & Decade. | 6-12 |
| 6-7 | 33285A | Schematic 100 MHz Amp & Decade | 6-13 |
| 6-8 | 23733B | ACTO | 6-18 |
| 6-9 | 23730 | Schematic ACTO P.C. Assembly | 6-19 |
| 6-10 | 23730 | Schematic ACTO Sheet 2 | 6-20 |
| 6-11 | 23730 | Schematic ACTO Sheet 3 | 6-21 |
| 6-12 | 25189C | 300 MHz Prescaler. | 6-32 |
| 6-13 | 25186 | Schematic 300 MHz Prescaler. | 6-33 |
| 6-14 | 19943D | 1 MHz (Shaped) Assembly. | 6-38 |
| 6-15 | 23388 | Schematic 1 MHz (Shaped) Assembly. | 6-39 |
| 6-16 | 19941C | Frequency Function | 6-42 |
| 6-17 | 23388 | Schematic Frequency Function P.C. Assembly | 6-43 |
| 6-18 | 19939D | 9 Digit P.C. Assembly. | 6-48 |
| 6-19 | 23197D | Schematic 9 Digit P.C. Assembly. | 6-49 |
| 7-1 | 25667 | B3 Option Schematic | 7-6 |
| 7-2 | 25262 | B3 High Stability Oscillator Assembly | 7-7 |
| 7-3 | 25666 | B3 Final Assembly | 7-8 |
| 7-4 | 25618 | B Option Schematic | 7-9 |
| 7-5 | 19786 | B Option Power Supply Assembly | 7-10 |
| 7-6 | 19805 | B Option Transformer | 7-11 |
| 7-7 | 19376 | B High Stability Oscillator | 7-12 |
| 7-8 | 25610 | B Option Final Assembly | 7-13 |
| 7-9 | 27387 | B5 Option Schematic | 7-15 |
| 7-10 | 27220 | B5 Regulator Assembly | 7-16 |
| 7-11 | 27217 | B5 Regulator Schematic | 7-17 |
| 7-12 | 23477 | B5 High Stability Oscillator | 7-18 |
| 7-13 | 27228 | B5 Option Final Assembly | 7-19 |

## LIST OF FIGURES AND SCHEMATICS (Con't.)


| FIGURE NO. | SCHEMATIC NO. | DESCRIPTION | PAGE |
|---|---|---|---|
| 7-14 | 23110 | ÷3 1 MHz P.C. Assembly | 7-21 |
| 7-15 | 23112 | ÷3 1 MHz P.C. Schematic | 7-22 |
| 7-16 | 23454 | D1 Option Schematic | 7-24 |
| 7-17 | 23874 | D1 Option Assembly | 7-25 |
| 7-18 | 23893 | D1 Option Final Assembly | 7-26 |
| 7-19 | S29436 | D3 Option Schematic | 7-28 |
| 7-20 | S29592 | D3 Decoding Diodes | 7-29 |
| 7-21 | S29439 | D3 Option P.C. Assembly | 7-30 |
| 7-22 | S29444 | D3 Option Final Assembly | 7-31 |


## LIST OF TABLES


| TABLE NO. | DESCRIPTION | PAGE |
|---|---|---|
| 3-1 | Front Panel Controls - Connectors - Indicators. | 3-2 |
| 3-2 | Rear Panel Controls - Connectors. | 3-4 |
| 3-3 | Self-Test Check Table | 3-5 |
| 5-1 | Test Equipment | 5-1 |
| 5-2 | Trouble Shooting Procedures | 5-6 |

SYSTRON DONNER CORPORATION

# ADDENDUM

MODEL 6316A

Modify the Contents to read as follows:

Page vii.

CHAPTER 6 DRAWINGS AND PARTS LISTS

| | | | |
|---|---|---|---|
| 25580F | Figure 6-1 | Block Diagram Model 6316A | Addendum |
| 39029 | Figure 6-4 | 100 MHz Input Amplifier P.C. Assembly | Addendum |
| 39026 | Figure 6-5 | Schematic 100 MHz Input Amplifier P.C. Assembly | Addendum |
| 39029 | | 100 MHz Amplifier P.C. Assembly Parts List | Addendum |
| 23730 | Figure 6-10 | Schematic ACTO P.C. Assembly Sheet 2 | Addendum |
| 23197 | Figure 6-19 | Schematic 9 Digit P.C. Assembly | Addendum |
| 19939 | | 9 Digit P.C. Assembly Parts List | Addendum |

Page viii. Add the following:

CHAPTER 8 MODEL 6316B

On page ix, change to read:

| Figure No. | Schematic No. | Description | Page |
|---|---|---|---|
| 4-1 | 25580 | Block Diagram 6316A | 4-1 |

In Chapter 4, PRINCIPLES OF OPERATION, make the following changes.

Page 4-1 Change Figure 4-1 Title to read:

Figure 4-1 Block Diagram Model 6316A

Page 4-1 Figure 4-1. Block Diagram Model 6316A.

Change P.C. ASSEMBLY 100 MHz A AMPLIFIER
SCHEMATIC 33259
ASSEMBLY 33262

To Read P.C. ASSEMBLY 100 MHz INPUT AMPLIFIER
SCHEMATIC 39026
ASSEMBLY 39029

Change P.C. ASSEMBLY 7 DIGIT (COUNT CHAIN & READOUT)
SCHEMATIC 23195
ASSEMBLY 19959

To Read P.C. ASSEMBLY 9 DIGIT (COUNT CHAIN & READOUT)
SCHEMATIC 23197
ASSEMBLY 19939

Page 4-3, Paragraph 4.3.1 100 MHz Input Amplifier
(Schematic #39026, Assembly #39029)

Page 4-3, Figure 4-2 100 MHz A Amplifier, Location - Delete

Change Page 4-4:

Paragraph Beginning: Incoming signals are fed from the 0-.1 GHz front panel input connector, through the AC-DC coupling network, and ending : Transistors Q10 and Q11 and their circuits act as dynamic power supply regulators and filters for the differential amplifier circuits,

To: Incoming signals are fed from the 0-.1 GHz front panel connector, through the 1-10-100 ATTENuation network, to the push-pull amplifier Q1/Q2. The output of this stage is coupled to complementary emitter followers Q9/Q10-Q11/Q12 along with the output of the differential amplifier, Q-3 and Q-5, through buffer Q8. The output of the emitter followers, which is the output of the circuit, is fed back to one side of the differential amplifier at the gate of Q5, along with the output of the trigger level circuit. The input signal is tied to the other side of the differential amplifier at the gate of Q3. This circuit compares the dc level of the output, which must remain constant, with that of the input, and inserts ± offset voltages to compensate for high and low input levels. The PREset trigger function clamps the output to near zero level. Transistors Q4 and Q6 act as dynamic power supply regulators and filters for the differential amplifier circuits.

In Chapter 6, Page 6-28, make the following changes:

Delete: R18, Resistor, 56 k, 1/4 W, 5%, SD Part No. R1235
R21, Resistor, 12 k, 1/4 W, 5%, SD Part No. R0759

Add: R21, Resistor, 3.9 k, 1/4 W, 5%, SD Part No. R0939

In Chapter 7 make the following changes:

Page 7-4 Paragraph 7.4 REMOTE CONTROL "P" OPTION
Change to read:

| | | |
|---|---|---|
| Prescaler | 16 | 4 |
| Range #1 | 15 | 5 |

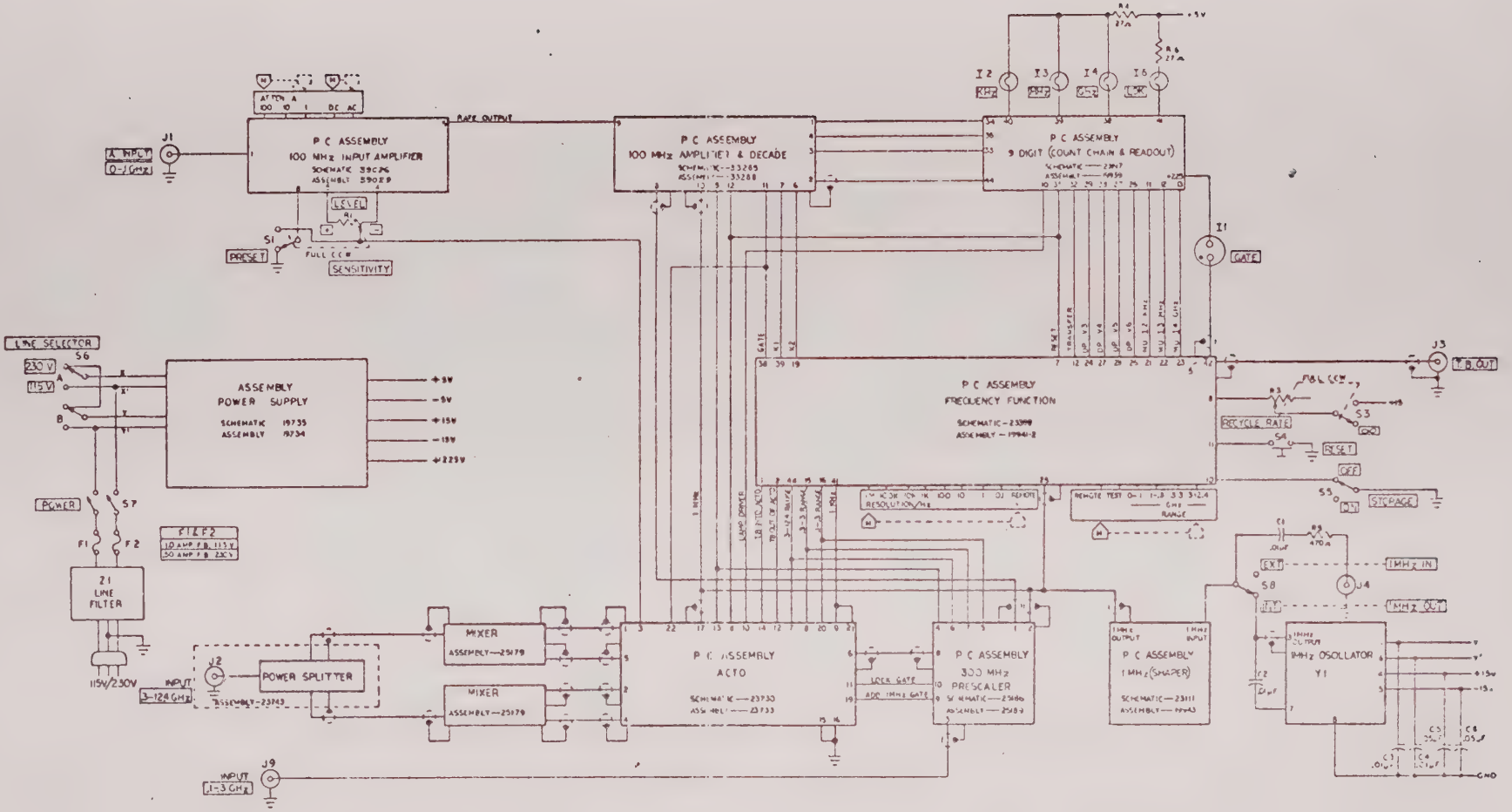


MODEL 6316A BLOCK DIAGRAM #25580

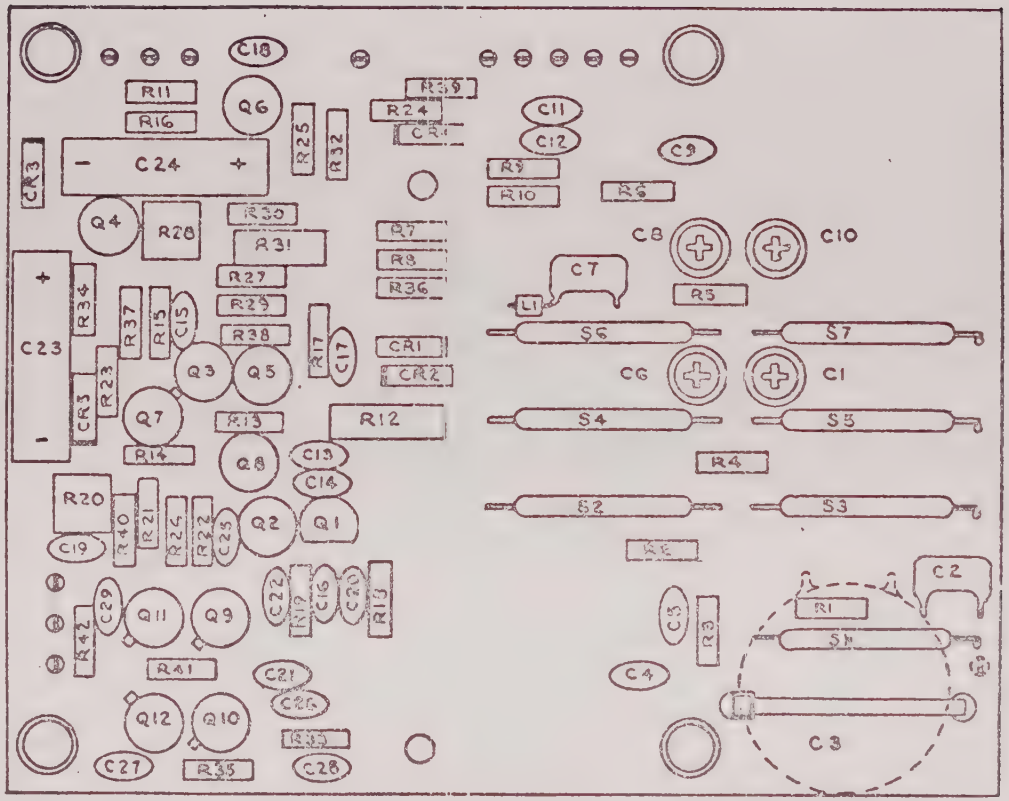


100 MHz INPUT AMPLIFIER P.C. ASSEMBLY #39029

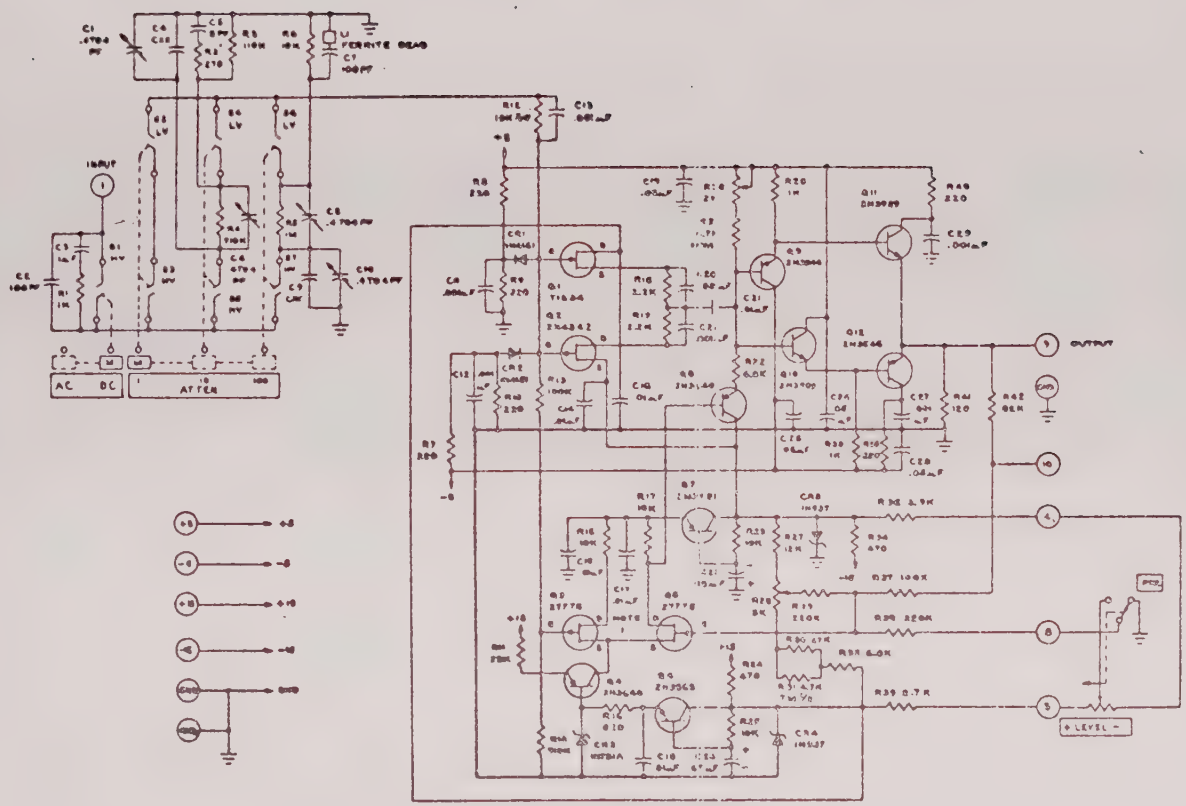

100 MHz INPUT AMPLIFIER SCHEMATIC #39026

## 100 MHz AMPLIFIER P.C. ASSEMBLY PARTS LIST

| REF. | DESCRIPTION | PART NO. |
|---|---|---|
| | 100 MHz Input Amplifier P.C. Assembly | 39029 |
| | 100 MHz Input Amplifier Schematic | 39026 |
| C1 | Not Used | |
| C2 | Capacitor, 100 pF, 500 V, DM | C0874 |
| C3 | Capacitor, .1 µF, 500 V, Disc | C1106 |
| C4 | Capacitor, CXX | |
| C5 | Capacitor, 8 pF, 500 V, DM | C0597 |
| C6 | Not Used | |
| C7 | Capacitor, 100 pF, 500 V, DM | C0874 |
| C8 | Not Used | |
| C9 | Capacitor, CXX | |
| C10 | Not Used | |
| C11 | Capacitor, .001 µF, 1 kV, Disc | C0424 |
| C12 | Capacitor, .001 µF, 1 kV, Disc | C0424 |
| C13 | Capacitor, .001 µF, 1 kV, Disc | C0424 |
| C14 | Capacitor, .01 µF, 100 V, Disc | C0556 |
| C15 | Capacitor, .01 µF, 100 V, Disc | C0556 |
| C16 | Capacitor, .01 µF, 100 V, Disc | C0556 |
| C17 | Capacitor, .01 µF, 100 V, Disc | C0556 |
| C18 | Capacitor, .01 µF, 100 V, Disc | C0556 |
| C19 | Capacitor, .05 µF, 12 V, Disc | C0672 |
| C20 | Capacitor, .001 µF, 1 kV, Disc | C0424 |
| C21 | Capacitor, .01 µF, 100 V, Disc | C0556 |
| C22 | Capacitor, .001 µF, 1 kV, Disc | C0424 |
| C23 | Capacitor, 68 µF, 15 V, Tant | C0904 |
| C24 | Capacitor, 68 µF, 15 V, Tant | C0904 |
| C25 | Capacitor, .05 µF, 12 V, Disc | C0672 |
| C26 | Capacitor, .05 µF, 12 V, Disc | C0672 |
| C27 | Capacitor, .001 µF, 1 kV, Disc | C0424 |
| C28 | Capacitor, .05 µF, 12 V, Disc | C0672 |
| C29 | Capacitor, .001 µF, 1 kV, Disc | C0424 |
| CR1 | Diode, 1N4151 | CR0150 |
| CR2 | Diode, 1N4151 | CR0150 |
| CR3 | Diode, 1N751A | CR0095 |
| CR4 | Diode, 1N937 | CR0109 |
| CR5 | Diode, 1N937 | CR0109 |
| L1 | Ferrite Bead | H0654 |
| Q1 | Transistor, T1S34 | Q0244 |
| Q2 | Transistor, 2N4342 | Q0243 |
| Q3 | Transistor, Matched Pair, 2N4342 | 27775 |

## 100 MHz AMPLIFIER P.C. ASSEMBLY PARTS LIST (Cont'd)

| REF. | DESCRIPTION | PART NO. |
|---|---|---|
| Q4 | Transistor, 2N3640 | Q0178 |
| Q5 | Transistor, Matched Pair, 2N4342 | 27775 |
| Q6 | Transistor, 2N3563 | Q0237 |
| Q7 | Transistor, 2N3251 | Q0174 |
| Q8 | Transistor, 2N3640 | Q0178 |
| Q9 | Transistor, 2N3546 | Q0192 |
| Q10 | Transistor, 2N3959 | Q0200 |
| Q11 | Transistor, 2N3959 | Q0200 |
| Q12 | Transistor, 2N3546 | Q0192 |
| R1 | Resistor, 1 k, 5%, 1/4 W | R0765 |
| R2 | Resistor, 270 Ω, 5%, 1/4 W | R0694 |
| R3 | Resistor, 100 k, 5%, 1/4 W | R1010 |
| R4 | Resistor, 910 k, 5%, 1/4 W | R2312 |
| R5 | Resistor, 1 M, 5%, 1/4 W | R0962 |
| R6 | Resistor, 10 k, 5%, 1/4 W | R0766 |
| R7 | Resistor, 220 Ω, 5%, 1/4 W | R0760 |
| R8 | Resistor, 220 Ω, 5%, 1/4 W | R0760 |
| R9 | Resistor, 220 Ω, 5%, 1/4 W | R0760 |
| R10 | Resistor, 220 Ω, 5%, 1/4 W | R0760 |
| R11 | Resistor, 22 k, 5%, 1/4 W | R0768 |
| R12 | Resistor, 10 k, 5%, 1/2 W | R0292 |
| R13 | Resistor, 100 k, 5%, 1/4 W | R0741 |
| R14 | Resistor, 910 k, 5%, 1/4 W | R2312 |
| R15 | Resistor, 10 k, 5%, 1/4 W | R0766 |
| R16 | Resistor, 820 Ω, 5%, 1/4 W | R0762 |
| R17 | Resistor, 10 k, 5%, 1/4 W | R0766 |
| R18 | Resistor, 2.2 k, 5%, 1/4 W | R0749 |
| R19 | Resistor, 2.2 k, 5%, 1/4 W | R0749 |
| R20 | Resistor, 2 k, Potentiometer | R2382 |
| R21 | Resistor, 4.7 k, 5%, 1/4 W | R0892 |
| R22 | Resistor, 6.8 k, 5%, 1/4 W | R0696 |
| R23 | Resistor, 10 k, 5%, 1/4 W | R0766 |
| R24 | Resistor, 470 Ω, 5%, 1/4 W | R0144 |
| R25 | Resistor, 10 k, 5%, 1/4 W | R0766 |
| R26 | Resistor, 1 k, 5%, 1/4 W | R0765 |
| R27 | Resistor, 12 k, 5%, 1/4 W | R0759 |
| R28 | Resistor, 5 k, Potentiometer | R2187 |
| R29 | Resistor, 220 k, 5%, 1/4 W | R0967 |
| R30 | Resistor, 47 k, 5%, 1/4 W | R0777 |
| R31 | Resistor, 4.7 k, TM, 1/8 | R2589 |
| R32 | Resistor, 6.8 k, 5%, 1/4 W | R0696 |
| R33 | Resistor, 1 k, 5%, 1/4 W | R0765 |

## 100 MHz AMPLIFIER P.C. ASSEMBLY PARTS LIST (Cont'd)

| REF. | DESCRIPTION | PART NO. |
|---|---|---|
| R34 | Resistor, 470 Ω, 5%, 1/4 W | R0144 |
| R35 | Resistor, 220 Ω, 5%, 1/4 W | R0760 |
| R36 | Resistor, 3.9 k, 5%, 1/4 W | R0939 |
| R37 | Resistor, 100 k, 5%, 1/4 W | R0741 |
| R38 | Resistor, 220 k, 5%, 1/4 W | R0967 |
| R39 | Resistor, 2.7 k, 5%, 1/4 W | R0937 |
| R40 | Resistor, 220 Ω, 5%, 1/4 W | R0760 |
| R41 | Resistor, 120 Ω, 5%, 1/4 W | R1461 |
| R42 | Resistor, 82 k, 5%, 1/4 W | R0784 |
| S1 | Reed Switch, High Voltage | 19369 |
| S2 | Reed Switch, Low Voltage | 19368 |
| S3 | Reed Switch, High Voltage | 19369 |
| S4 | Reed Switch, Low Voltage | 19368 |
| S5 | Reed Switch, High Voltage | 19369 |
| S6 | Reed Switch, Low Voltage | 19368 |
| S7 | Reed Switch, High Voltage | 19369 |
| | Screw, 6-32 x 1/8", PHMS | H1728 |
| | Screw, 4-40 x 100° x 5/8", FHMS | H1672 |
| | Screw, 4-40 x 100° x 1/2", FHMS | H1149 |
| | Washer, #6, Flat | H0484 |
| | Washer, Mica | E0299 |
| | Washer, #4, Split | H0782 |
| | Washer, #4, Nylon | H1476 |
| | Terminal Lug | E0100 |
| | Standoff, 1/4" Long | E0275 |
| | Cable Tie | H1104 |
| | Mylar Insulator | H1838 |
| | Support Slide Switch | 23373 |
| | Nut, #4, Hex | H0249 |
| | Spacer, Slide Switch Support | 23336 |

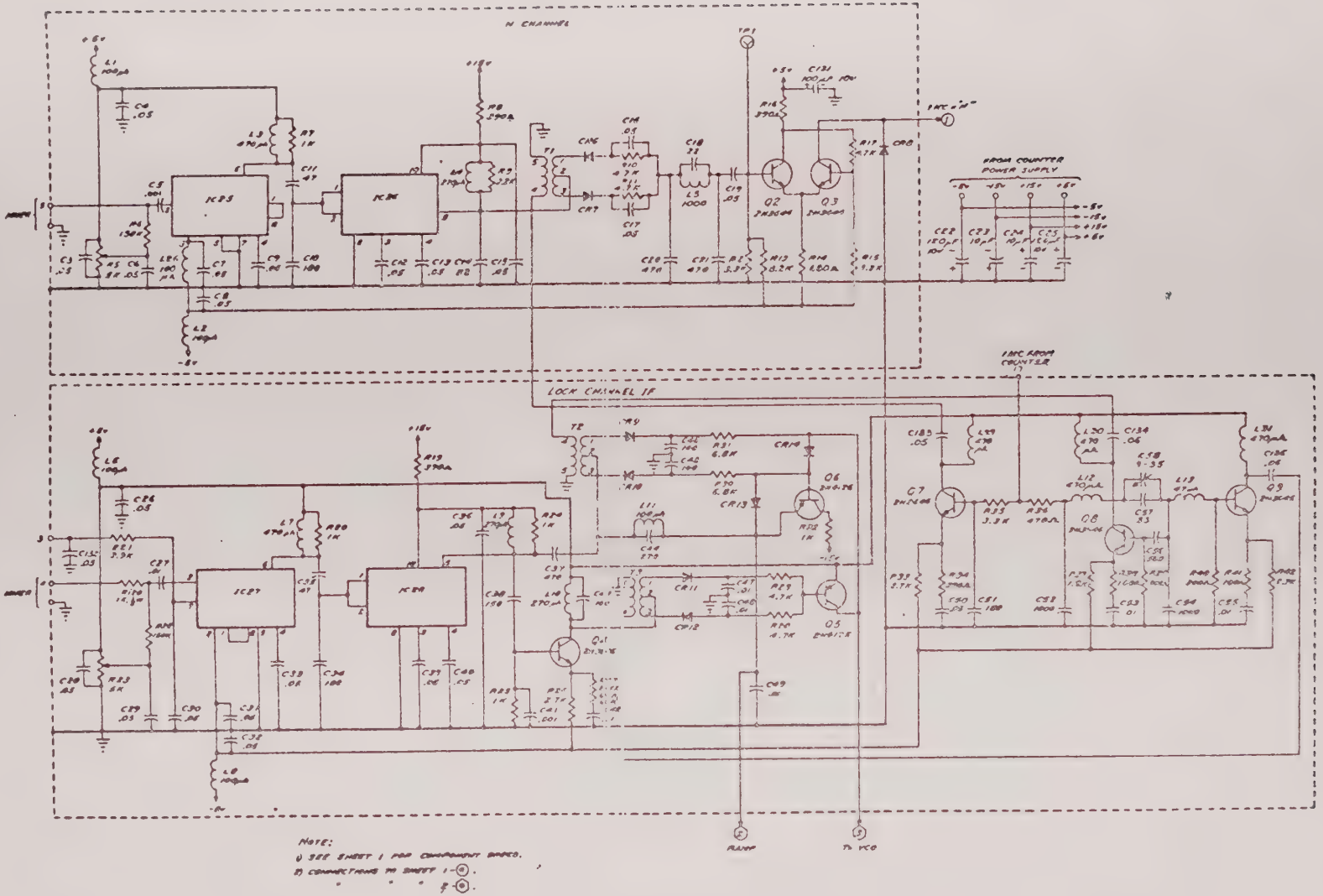


ACTO P.C. ASSEMBLY SCHEMATIC #23730

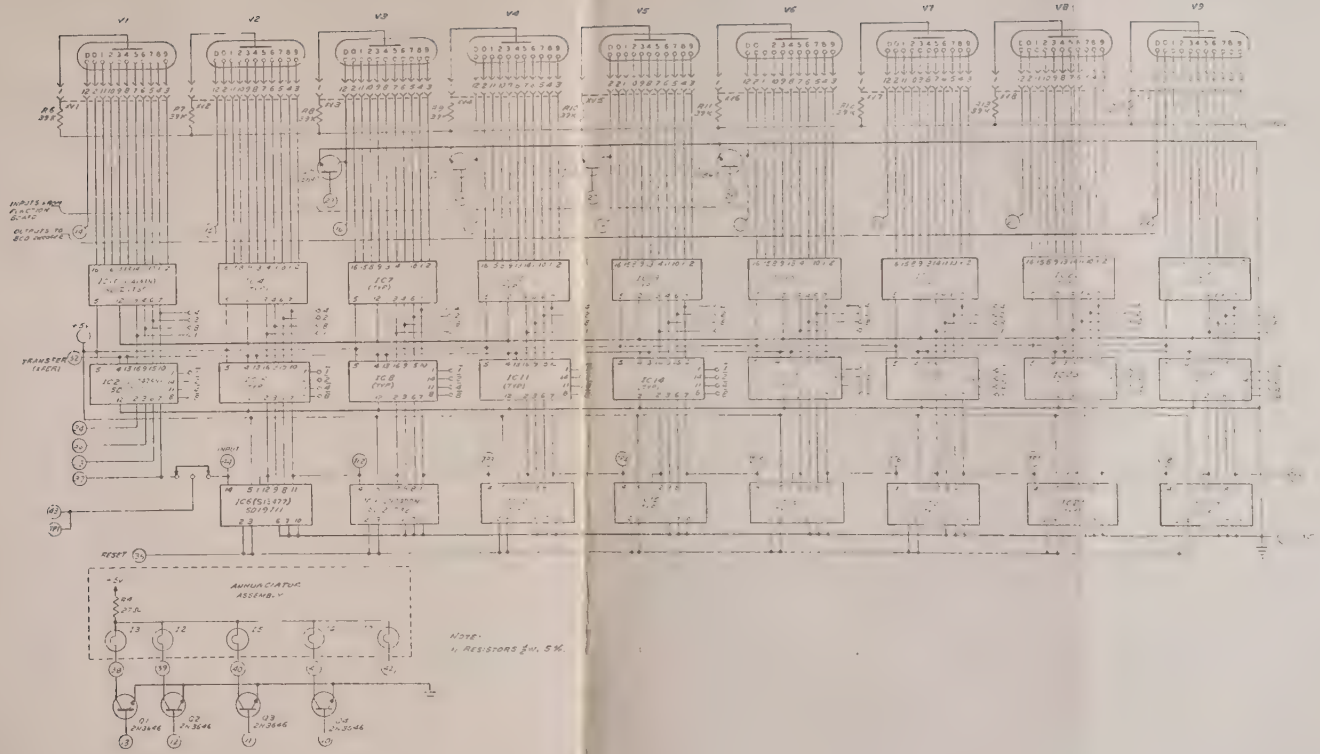


FIGURE 6-19 SCHEMATI[illegible] 9 DIGIT P.C. [illegible]

(P. 6-49)

# 9 DIGIT P.C. ASSEMBLY PARTS LIST

| REF. | DESCRIPTION | PART NO. |
|---|---|---|
| | 9 Digit P.C. Assembly | 19939 |
| | 9 Digit Schematic | 23197 |
| IC1 | Integrated Circuit, SN74141N | 75730 |
| IC2 | Integrated Circuit, SN7475N | 19710 |
| IC3 | Not Used | |
| IC4 | Integrated Circuit, SN74141N | 75730 |
| IC5 | Integrated Circuit, SN74141N | 19710 |
| IC6 | Integrated Circuit, S13477 | 19711 |
| IC7 | Integrated Circuit, SN74141N | 75730 |
| IC8 | Integrated Circuit, SN7475N | 19710 |
| IC9 | Integrated Circuit, SN7490N | 25732 |
| IC10 | Integrated Circuit, SN74141N | 75730 |
| IC11 | Integrated Circuit, SN7475N | 19710 |
| IC12 | Integrated Circuit, SN7490N | 25732 |
| IC13 | Integrated Circuit, SN74141N | 75730 |
| IC14 | Integrated Circuit, SN7475N | 19710 |
| IC15 | Integrated Circuit, SN7490N | 25732 |
| IC16 | Integrated Circuit, SN74141N | 75730 |
| IC17 | Integrated Circuit, SN7475N | 19710 |
| IC18 | Integrated Circuit, SN7490N | 25732 |
| IC19 | Integrated Circuit, SN74141N | 75730 |
| IC20 | Integrated Circuit, SN7475N | 19710 |
| IC21 | Integrated Circuit, SN7490N | 25732 |
| IC22 | Integrated Circuit, SN74141N | 75730 |
| IC23 | Integrated Circuit, SN7475N | 19710 |
| IC24 | Integrated Circuit, SN7490N | 25732 |
| IC25 | Integrated Circuit, SN74141N | 75730 |
| IC26 | Integrated Circuit, SN7475N | 19710 |
| IC27 | Integrated Circuit, SN7490N | 25732 |
| Q1 | Transistor, 2N3646 | Q0218 |
| Q2 | Transistor, 2N3646 | Q0218 |
| Q3 | Transistor, 2N3646 | Q0218 |
| Q4 | Transistor, 2N3646 | Q0218 |
| Q5 | Not Used | |
| Q6 | Not Used | |
| Q7 | Not Used | |
| Q8 | Transistor, 15840 | 15840 |
| Q9 | Transistor, 15840 | 15840 |
| Q10 | Transistor, 15840 | 15840 |
| Q11 | Transistor, 15840 | 15840 |
| Q12 | Not Used | |

## 9 DIGIT P.C. ASSEMBLY PARTS LIST (Cont'd)

| REF. | DESCRIPTION | PART NO |
|---|---|---|
| Q13 | Not Used | |
| R1 | Resistor, 39 k, 5%, 1/2 W | R0282 |
| R2 | Resistor, 39 k, 5%, 1/2 W | R0282 |
| R3 | Resistor, 39 k, 5%, 1/2 W | R0282 |
| R4 | Resistor, 39 k, 5%, 1/2 W | R0282 |
| R5 | Resistor, 39 k, 5%, 1/2 W | R0282 |
| R6 | Resistor, 39 k, 5%, 1/2 W | R0282 |
| R7 | Resistor, 39 k, 5%, 1/2 W | R0282 |
| R8 | Resistor, 39 k, 5%, 1/2 W | R0282 |
| R9 | Resistor, 39 k, 5%, 1/2 W | R0282 |
| TP1 | Test Point, Brown | E0284 |
| TP2 | Test Point, Red | E0279 |
| TP3 | Test Point, Orange | E0282 |
| TP4 | Test Point, Yellow | E0283 |
| TP5 | Test Point, Green | E0281 |
| TP6 | Test Point, Blue | E0285 |
| TP7 | Test Point, Violet | E0286 |
| TP8 | Test Point, Grey | E0288 |
| TP9 | Test Point, White | E0279 |
| V1 | Tube, Readout | V0122 |
| V2 | Tube, Readout | V0122 |
| V3 | Tube, Readout | V0122 |
| V4 | Tube, Readout | V0122 |
| V5 | Tube, Readout | V0122 |
| V6 | Tube, Readout | V0122 |
| V7 | Tube, Readout | V0122 |
| V8 | Tube, Readout | V0122 |
| V9 | Tube, Readout | V0122 |
| | Screw, 6-32 x 1-1/8", FHMS | H1693 |
| | Screw, 6-32 x 1/2", FHMS | H0933 |
| | Terminal Lug | E0100 |
| | Transistor Pad | H0515 |
| | Washer, #6, Internal Tooth | H0410 |
| | Wire List, Readout Jumper | 27313 |

# CHAPTER 1

# GENERAL DESCRIPTION

## 1.1 INTRODUCTION

The Systron-Donner Model 6316A Frequency Meter is an ultra compact instrument for precise frequency measurements from DC into the microwave portions of the spectrum. It incorporates simple controls and a readily accessible layout for easy operation and maintenance. Its circuitry makes wide use of integrated circuits and other proven solid state devices for maximum reliability and compactness. The Model 6313A, carefully designed to satisfy the most exacting requirements, provides:

- o A fully automatic measuring technique.
- o Direct readout with counter accuracy.
- o DC to 12.4 GHz - complete uninterrupted coverage of the RF spectrum into the microwave region.
- o Easy read storage type display.
- o Nine-digit answers with automatic decimal and units-of-measure indications.
- o Complete self contained operation.

## 1.2 FUNCTIONAL DESCRIPTION

The Model 6316A Frequency Meter is capable of direct measurements from DC to 12.4 GHz with resolution to 0.1 Hz using three measuring modes:

- + Direct Counting in the 0.0 to 0.1 GHz range,
- + Prescaler Counting in the 0.1 to 0.3 GHz range, and
- + ACTO counting in the 0.3 to 12.4 GHz range.

The accuracy of all measurements is ±1 count ± time base stability. Resolution is selectable in decade steps from 0.1 Hz to 1 MHz by front panel switch. Most front panel controls are slide switches to save space, and to make possible the instrument's 1 3/4" panel height. Retractable legs allow bench top use. The Model 6316A may also be installed in a standard 19" rack or console.

## 1.3 SPECIFICATIONS

### 1.3.1 Direct Count Range, (0-.1 GHz A-Input)

**Range:**
0 to .1 GHz (DC input) 10 Hz to .1 GHz (AC input)

**Resolution:**
0.1 Hz to 1 MHz in decade steps

**Accuracy:**
±1 count ± time base accuracy

**Sensitivity:**
100 mV rms

**Coupling:**
AC or DC, switch selectable

**Attenuation:**
Step attenuator with factors of 1, 10, and 100

**Level:**
±1 volt time attenuation factor A "preset" position centers trigger level at 0 volt.

**Impedance:**
1 MΩ, approximately 15 pf shunt

1 mW / 1 mW = 0 dBm

0 dBm = 1 mW

6 dBm = 4 mW

3 dBm = 2 mW

Overload without damage:
75 V peak on x1, 200V peak on x10, and 600V peak on x100 attenuator settings *SEE BELOW

Reads in:
kHz, MHz, and GHz with positioned decimal point

Self Check:
Counts 1 MHz for resolution selected

1.3.2 Pre-Scaler Range (.1-.3 GHz Input)

Type of Input

Range:
0.1 to 0.3 GHz

Resolution:
0.1 Hz to 1 MHz in decade steps

Accuracy:
±1 count ± time base accuracy

Sensitivity:
100 mV rms

Coupling:
AC only

Impedance:
50Ω nominal

* Overload without damage:
2V rms

Reads in:
kHz, MHz, and GHz with positioned decimal point

1.3.3 ACTO Range (.3-12.4 GHz Input)

Type of Input

Signals:
CW

Range:
.3 to 3 GHz and 3-12.4 GHz

Resolution:
0.1 Hz to 1 MHz in decade steps

Accuracy:
±1 count ± time base accuracy

Sensitivity:
100 mV rms

Impedance:
50Ω nominal

Maximum useable signal level:
+7 dBm

* Overload without damage:
3V rms

FM Tolerance:
Maximum of 0.1% FM (FM = 60 Hz) decreasing by a factor of 2 per octave of FM above 60 Hz

Maximum AM Modulation (400 Hz to 1 kHz):
70%

Lock-on Range:
Approximately 2% of input frequency

Sweep Rate (Within any Lock-on Range):
12% $f_1$/sec ($f_1$ - instantaneous input frequency)

Reads in:
kHz, MHz, and GHz with positioned decimal point. "LOK" annunciator provides visual indication of phase-lock and correct display.

1.3.4 Time Base

Frequency Internal:
1 MHz

Stability:
Better than two parts in $10^8$ per day after 72 hours warmup

Output frequencies (rear panel):
1 MHz, 3 volts peak-to-peak minimum output impedance 1,000Ω nominal 0.1 Hz to 1 MHz in decade stesp selected by RESOLUTION switch, 470Ω output impedance, 3 volts peak-to-peak minimum. Stability of outputs same as internal time base.

External standard frequency:
1 MHz, 1V rms into 1,000 required at rear panel BNC connector

1.3.5 General

Display time:
0.2s to 5s independent of gate time

Operations temperature range:
-20°C to +65°C

Storage temperature:
-55°C to +85°C

Dimensions:
1 3/4" high by 17 1/2" wide x 19" deep (allow 22" depth in rack when rack mounting the instrument)

Weight:
Approximately 20 lbs net

Power:
115V or 230V ±10% (switch selectable) 50-60 Hz, 55W

## 1.4 OPTIONAL FEATURES

The following list briefly describes those optional features which may be included in your instrument to enhance its operation or increase its usefulness. A detailed description of available options will be found in Chapter 7.

Option B: A high stability oscillator whose aging rate after 72 hour warmup is <±1 part in $10^{10}$/24 hours.

Option B3: A medium stability oscillator whose aging rate after 72 hours warmup is <±3 parts in $10^{10}$/24 hours.

Option B5: A super-high stability oscillator whose aging rate after 72 hours warmup is <±5 parts in $10^{10}$/24 hours.

Option D1: Rear panel 1-2-4-8 BCD digital output using positive logic where ONE = +15 ±0.5, and ZERO = .25V ±0.25V

Option D3: Rear panel 1-2-4-8 BCD digital output using positive logic where ONE = +5 ±0.5V and ZERO = 0.25V ±0.25V.

Option P: Single line remote control, through a rear panel connector, of Function and Resolution settings.

Option R1: Addition of a rear panel input connector in parallel with the front panel "A-Input" connector.

# CHAPTER 2

# INSTALLATION

## 2.1 INTRODUCTION

The Model 6316A Frequency Meter is shipped in an operating condition, and is essentially ready for use as received. This section contains unpacking, inspection, and installation information to aid you in rapidly putting the instrument to use.

## 2.2 RECEIVING INSPECTION

As soon as the instrument is received check the carton for evidence of damage or rough handling. If such is found, notify the carrier and your Systron-Donner Representative - open the container only in their presence.

Use care in removing the instrument from the container. Check immediately for loose or broken control knobs, bent or broken connectors, and dents or scratches on the panel surfaces. If damage of any nature is found refer to the warranty instructions.

All Systron-Donner instruments must pass rigid tests before leaving the plant. Even so, a quick test should be performed as soon as possible after unpacking the instrument, to ensure that it was not damaged in shipment. See Chapter 3.3.

## 2.3 INSTALLATION

### 2.3.1 Power

The instrument is provided with a three conductor power cord which will ground the case when connected to a 3-connector grounding outlet. If a grounding outlet is not available, an adapter must be used which provides a grounding connection. Make sure the rear panel 115-230 switch is in the correct position before connecting the instrument to a power source.

### 2.3.2 Cooling

The SD 6316A design incorporates a cooling fan. Cooling air enters the case through holes near the front of the bottom panel, and exhausts through a screened opening in the rear panel. Be careful not to obstruct the flow of air into or out of the case, expecially when the instrument is resting flat on its bumper flat with the tilt stand folded up or removed.

NOTE

If the instrument is to be rack or console mounted and the stand and bumper feet will interfer, remove as required.

## 2.4 STORAGE AND RESHIPMENT

Environmental conditions during storage and shipment should be limited as follows:

- o Maximum temperature 85°C.
- o Minimum temperature -55°C.

To protect the instrument during shipment from place to place or storage, use the best packaging methods available. Contact the nearest Systron-Donner field office for materials similar to those used in original factory packaging. Contract packaging companies can provide dependable custom packaging on short notice.

- If possible, use the original container designed for the instrument. Otherwise use a strong carton (350 lb f/in$^2$ bursting strength) or wooden box to house it.
- Wrap the instrument in heavy paper or plastic before placing it in the shipping container.
- Use plenty of packing material around all sides of the instrument and protect the front panel with cardboard strips.
- Seal the package with strong tape or metal bands. Mark DELICATE INSTRUMENT on outside of package.
- Refer to the warranty page of this manual and check with Systron-Donner field office for shipping instructions. In all correspondance, refer to an instrument by model number and full serial number.

# CHAPTER 3

# OPERATION

## 3.1 GENERAL

The Model 6316A measures the frequency of signals applied to any one of its three inputs within the range specified for that input. Its operation is automatic with proper selection of switch settings, and its display requires no interpretation. The following sections discuss the various controls and connectors, and describe simple operating procedures and tests. A short discussion is also included on intrinsic error and its effect on instrument operation.

## 3.2 CONTROLS, CONNECTORS, AND INDICATORS

### 3.2.1 Front Panel Description

Figure 3-1 shows the instrument's front panel, and Table 3-1 describes the functions of the elements located there.

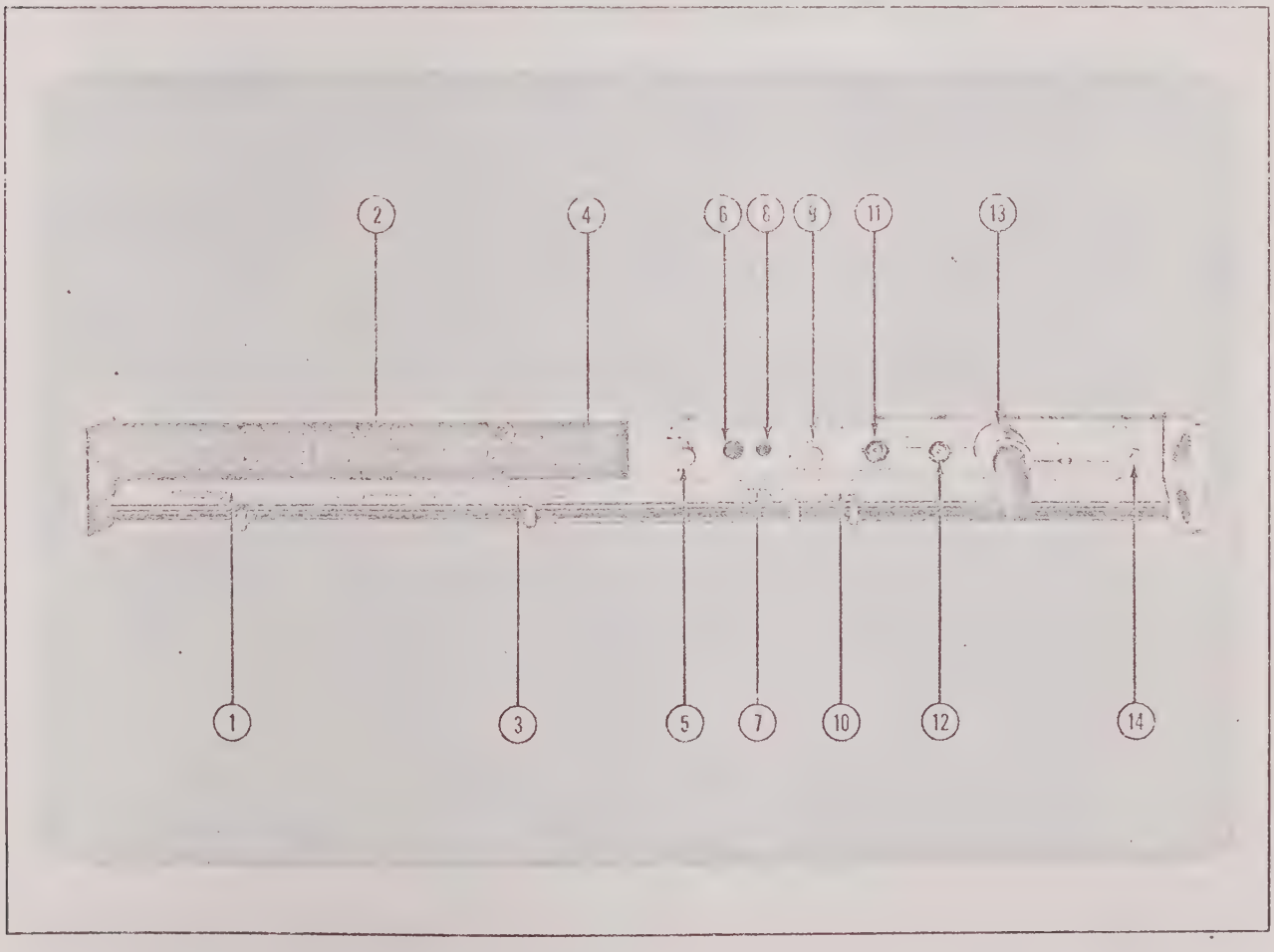


Figure 3-1. Model 6316A Front Panel

Table 3-1. Front Panel Controls - Connectors - Indicators

| Index | Nomenclature | Function |
|---|---|---|
| 1 | RESOLUTION Selector switch | Selects one of the eight time-base output frequencies to be used as time reference for rate measurements. They range from 0.1 Hz to 1 MHz in decade steps corresponding to time units from 10 seconds to 1.0 microsecond.<br>This switch also controls the automatic decimal point indication in terms of kHz, MHz, or GHz for measurement of the RATE function. REMOTE position permits remote control from rear panel connector with P Option. |
| 2 | Digital Display | 9 Numerical indicator tubes for digital display of measurements made and decimal points. |
| 3 | RANGE selector switch | Selects the frequency ranges of the instrument -- 0-.1, .1-.3, 0.3-3 and 3-12.4 GHz. Selects TEST function, giving the operator the capability to self-test the instrument, using the internal 1-MHz time base. REMOTE position permits remote control from rear panel connector, with P Option. |
| 4 | Measurement Units Annunciator | Displays measurement units for data displayed, as selected by the RESOLUTION switch kHz, MHz, and GHz. Also displays the "LOK" indication of phase-lock and correct answer in the ACTO mode (.3-12.4 GHz). |
| 5 | RECYCLE/RATE control | Varies the duration of data display from approximately 0.2 second to 5 seconds between automatic reset and recycle for the next measurement. In the extreme ccw position (∞), the display is in hold until manually reset. |
| 6 | GATE indicator | Lights while count gate is open. |
| 7 | ATTEN A selector switch | Selects attenuation factor (1, 10, or 100) for A Input signals. |
| 8 | RESET pushbutton | Manual control to reset counter to zero. |
| 9 | LEVEL/SENSITIVITY control | With the RANGE selector switch in the 0-.1 GHz position, this control selects the triggering point on the input signal waveform.<br>With the RANGE control in either the .3-3, or 3-12.4 GHz position, this control extablishes the gain of the ACTO high frequency amplifier. In the PREset position (maximum ccw), the trigger level for the A Input is set to the zero crossover point for the 0-.1 GHz range. |
| 10 | AC-DC switch | Selects direct coupled input (DC position), or a series/parallel capacitor-resistor coupling network (AC position) for the 0-.1 GHz A Input only. |
| 11 | (A) INPUT -0-.1 GHz connector | Input BNC type connector for 0-.1 GHz signals. |

Table 3-1. Front Panel Controls -Connectors - Indicators (con't.)

| Index | Nomenclature | Function |
|---|---|---|
| 12 | .1-.3 GHz input connector | Input BNC type connector for .1-.3 GHz signals. |
| 13 | .3-12.4 GHz input connector | Input N type connector for .3-12.4 GHZ signals. |
| 14 | POWER switch | Rotating switch turns ac power to the instrument on and off. |

### 3.2.2 Rear Panel Description

Figure 3-2 shows the instruments rear panel, and Table 3-2 describes the function of the elements located there.

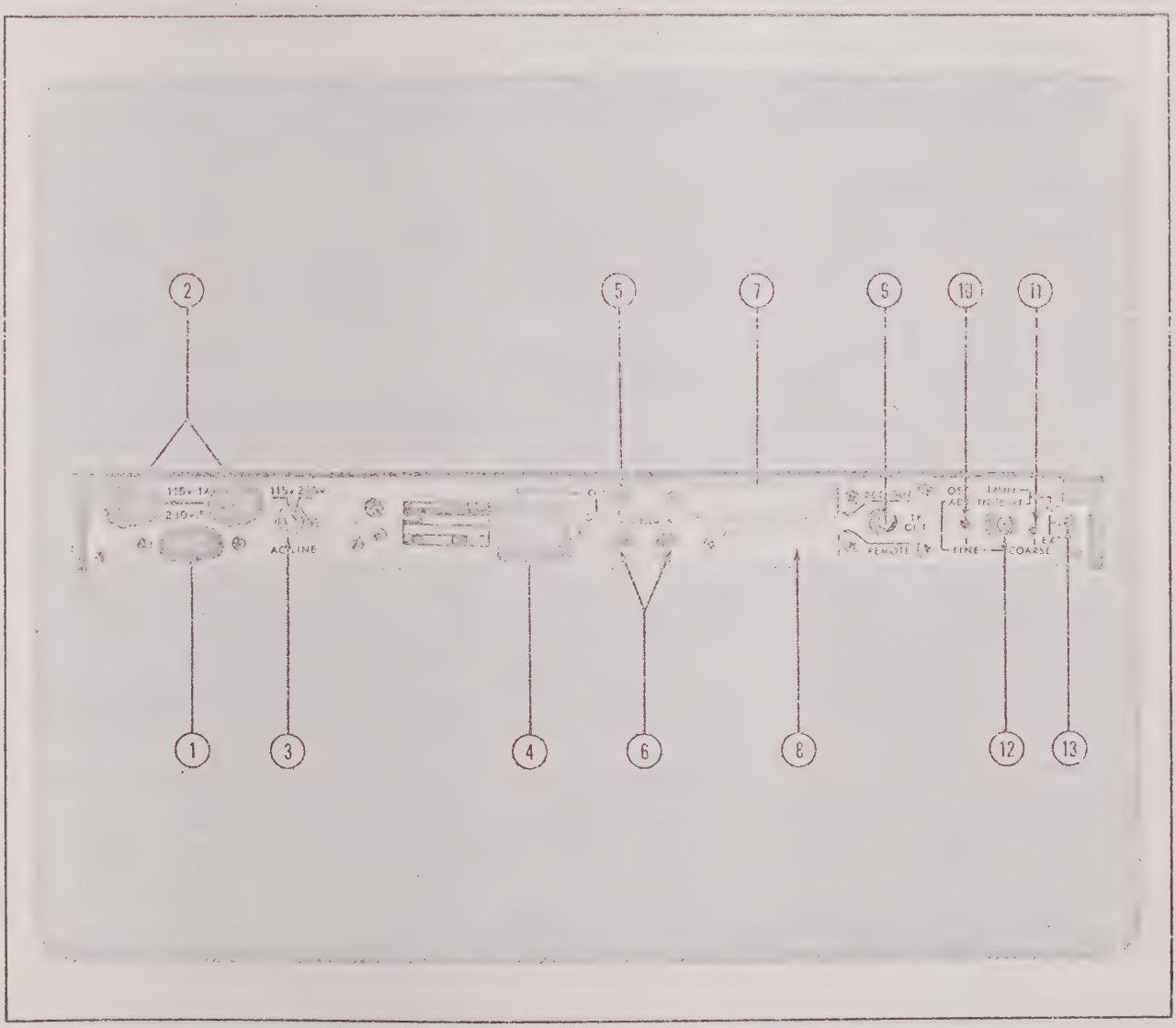


Figure 3-2. Model 6316A Rear Panel

Table 3-2. Rear Panel Controls - Connectors

| Index | Nomenclature | Function |
|---|---|---|
| 1 | Input connector, ac | Recessed male safety connector for separate ac power cord. |
| 2 | FUSE holders 115V/A 230V.5A | AC input line fuses, one for each side of the line (1.0 A for 115V, 0.5A for 230V). |
| 3 | 115V 230V/AC LINE selector switch | Rotary switch sets internal circuits for use with either 115V or 230V ac power sources. |
| 4 | Cooling blower outlet | Exhaust vent for blower system. |
| 5 | STORAGE ON-OFF switch | In the ON position, allow the instrument to display last naswer during next measurement. In the OFF position allows the instrument to continuously update the display during the measurement part of the cycle. |
| 6 | B-IN-A | Location of rear panel input when the "R1" Option is installed* |
| 7 | BCD OUT | Location of rear panel connector when "D" series option is installed* |
| 8 | REMOTE | Location of rear panel connector when the "P" option is installed* |
| 9 | TB OUT connector | This BNC type connector provides a time base output signal as selected by the RESOLUTION switch. |
| 10/11 | OSC ADJ FINE COARSE | Panel openings to reach adjusting controls included in certain oscillator options.* |
| 12 | 1 MHz IN/OUT connector | This BNC type connector connects to the instruments internal oscillator circuit. |
| 13 | INT-EXT switch | Switches the 1 MHz IN/OUT connector between functions of input and output. In the INT position, the output of the instrument's internal time base oscillator is available at the connector (1 MHz, 3V p-p minimum). In the EXT position, the internal oscillator is disconnected and the connector provides means of connecting an external time base oscillator (10 kHz to 2 MHz, 1-10V rms). |

*This rear panel assembly is common to several Systron-Donner thin-line instruments, and may contain provisions for features not found in the Model 6316A Frequency Meter.

## 3.3 INITIAL TURN-ON AND OPERATIONAL CHECKS

The following procedures may be used to quickly verify proper operation of the instrument following installation or long periods of non-use. Should the instrument fail any of these checks, refer to Chapter 5, MAINTENANCE AND REPAIR.

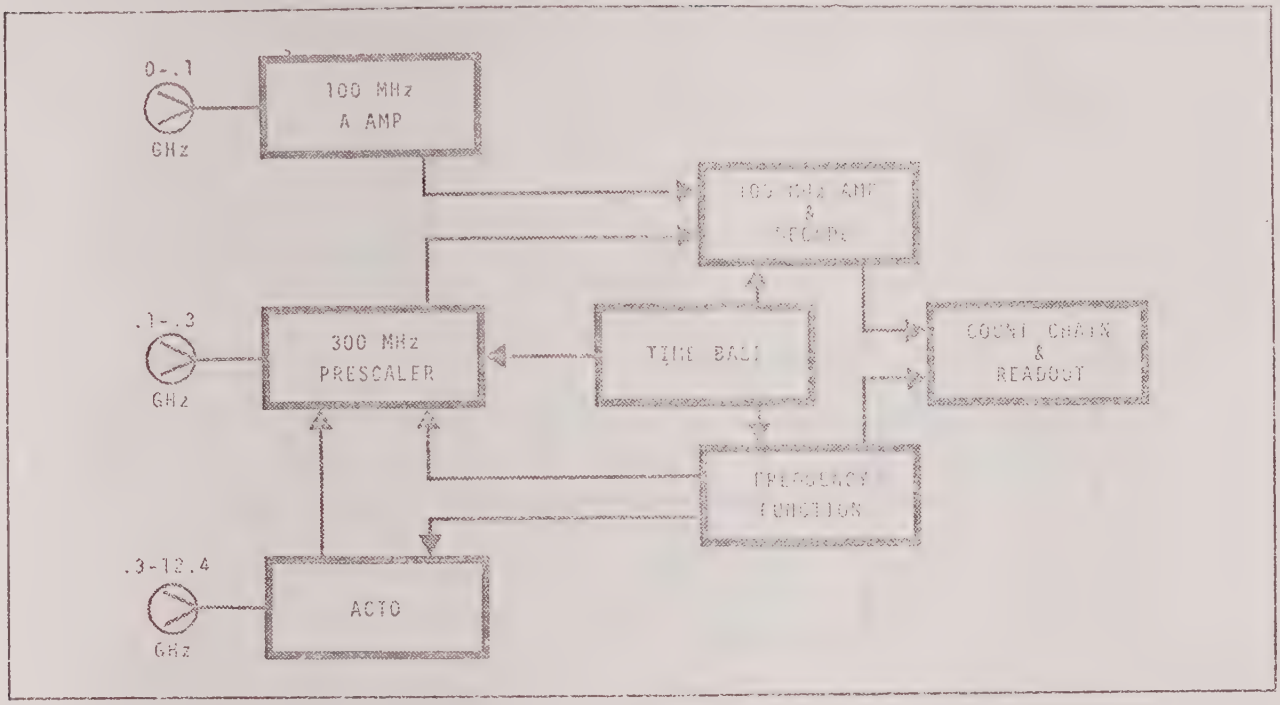


Figure 3-3. Model 6316A Block Diagram

### 3.3.1 Initial Functional Test

On the rear panel:

1. Connect the instrument to an appropriate power source (unless already accomplished during installation), and verify correct setting of the 115V-230V selector switch.
2. Place the STORAGE ON/OFF switch in the ON position.
3. Place the INT-EXT switch in the INT position.

On the front panel:

4. Move the RANGE switch to the TEST position.
5. Turn the RECYCLE-RATE control fully cw for minimum display time.
6. Turn the POWER switch cw to its on position.
7. Starting at the 1M psotion, move the RESOLUTION/Hz switch to each of its 9 positions and observe that the instrument displays the test readings as shown in Table 3-3.

Table 3-3. Self-Test Check Table

| RESOLUTION/Hz switch position | Correct indication |
|---|---|
| 1M | 000000.001 GHz |
| 100k | 00000.0010 GHz |
| 10k | 0000.00100 GHz |
| 1k | 000.001000 GHz |
| 100 | 00001.0000 MHz |
| 10 | 0001.00000 MHz |
| 1 | 001000.000 kHz |
| 0.1 | 000000.0000 kHz |
| REMOTE | 00000.0000 kHz |

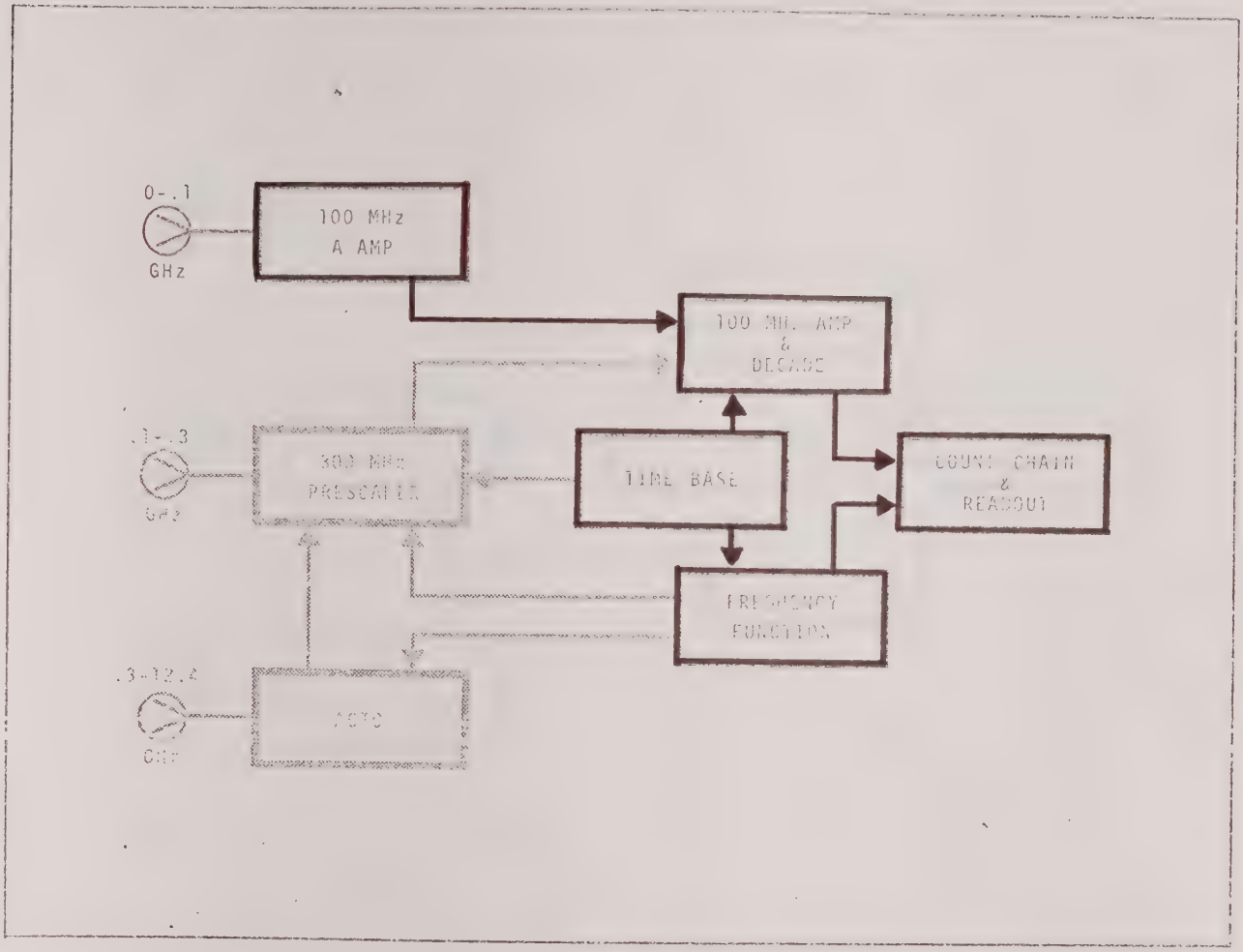


Figure 3-4. Model 6316A Block Diagram Direct Counting Mode Highlighted

On the front panel:

1. Move the RESOLUTION/Hz switch to the "10" position.
2. Move the RANGE switch to the "0-.1" position.
3. Turn the RECYCLE-RATE control fully cw for minimum display time.
4. Turn the LEVEL-SENSITIVITY control fully ccw into the PREset detent position.
5. Move the AC-DC switch to DC.
6. Move the ATTENUATION switch to 100.
7. Apply a 1-10 MHz cw signal to the 0-.1 GHz A INPUT connector. Adjust the signal level to at least 100 mV (observe signal level precautions outlined in Chapter 1.3).
8. Observe the display of a correct measurement of the applied signal.
9. If the instrument fails to display a measurement, move the ATTENUATION switch to a lower setting.
10. If the instrument fails to respond at the lowest ATTENUATOR setting, check that the level of the input signal is at least 100 mV.

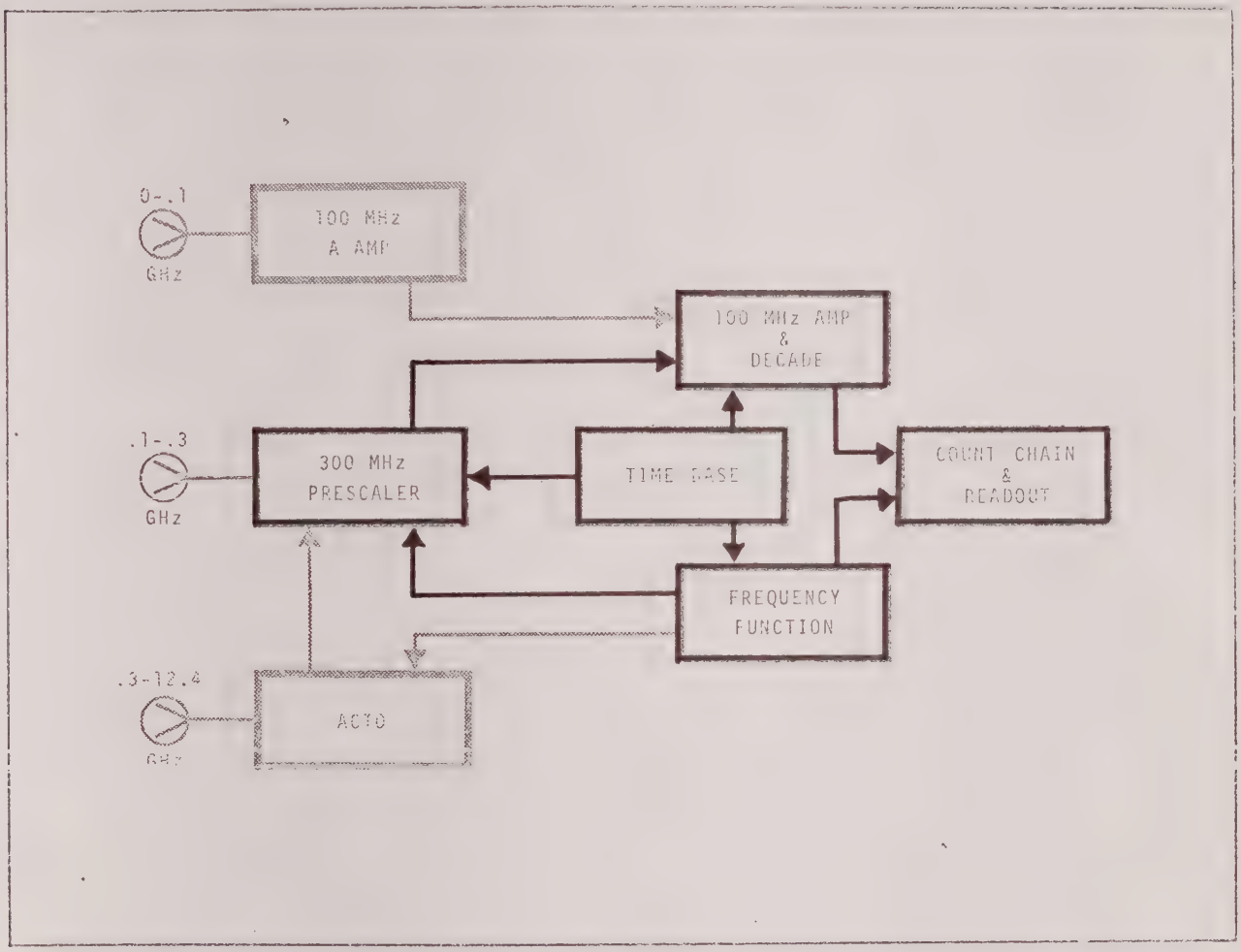


Figure 3-5. Model 6316A Block Diagram Prescaler Counting Mode Highlighted

On the front panel:

1. Move the RESOLUTION switch to the "100" position.
2. Move the RANGE switch to the ".1-.3" position.
3. Turn the RECYCLE-RATE control fully cw for minimum display time.
4. Apply a 100-300 MHz cw signal to the .1-.3 GHz input connector. Adjust the signal level to at least 100 mV (observe signal level precautions outlined in Chapter 1.3).
5. Observe the display of a correct measurement of the applied signal.
6. If the instrument fails to respond check that the level of the input signal is at least 100 mV.

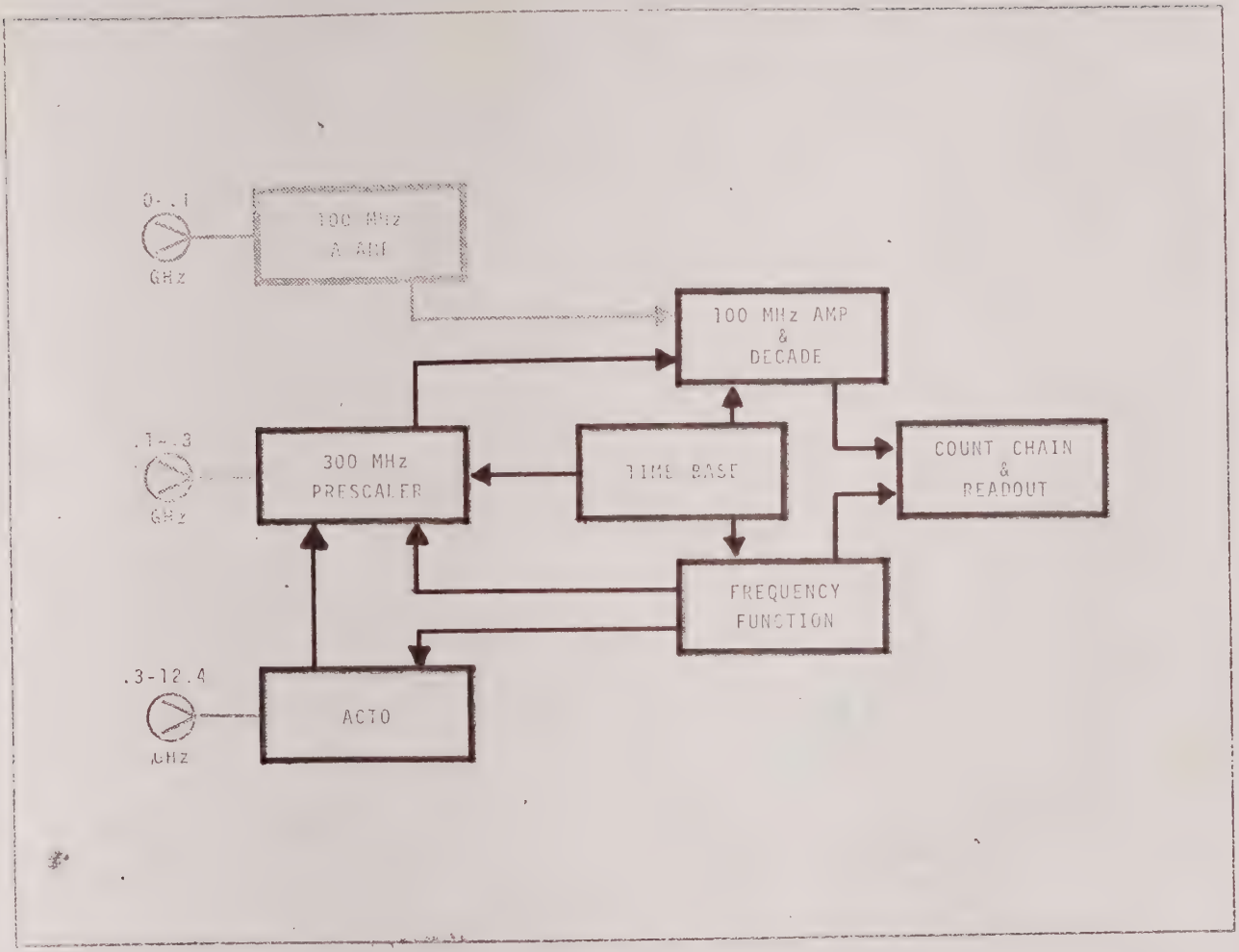


Figure 3-6. Model 6316A Block Diagram ACTO Counting Mode Highlighted

On the front panel:

1. Move the RESOLUTION/Hz switch to the "100" position.
2. Move the RANGE switch to the ".3-3" position.
3. Turn the RECYCLE-RATE control fully cw for minimum display time.
4. Turn the LEVEL-SENSITIVITY Control fully ccw, but not into the PREset detent position.
5. Apply a .3-12.4 GHz cw signal to the .3-12.4 GHz input connector. Adjust the signal level to at least 100 mV (observe signal level precautions outlined in Chapter 1.3).
6. Turn the sensitivity control cw until the "LOK" indication appears on the center annunciator panel, followed by a display of a correct measurement of the applied signal.
7. Turn the LEVEL-SENSITIVITY control ccw. Observe loss of the "LOK" indication and eventual loss of the display (all digits return to "0").
8. Slowly turn the LEVEL-SENSITIVITY control cw. Observe reaquisition of the "LOK" indicator at same point, followed by a redisplay of the correct measurement.

## 3.4 OPERATING PROCEDURES

Operation of the SD 6316A Frequency Meter is nearly automatic. The following items are listed only as a guide to proper operations.

- Always set RESOLUTION/Hz switch for desired display.
- Set RANGE switch to coincide with the frequency to be measured.
- Set RECYCLE-RATE control to obtain desired display time.
- Set ATTENUATION, AC-DC, and LEVEL-SENSITIVITY controls to obtain best measurements results.
- Connect input signal to the proper input connector. Observe input signal level precautions.

## 3.5 APPLICATIONS

Nine Digit accuracy in seconds. The sample time is the time required for the counter to accumulate and display an answer. This sample time is calculated as follows:

$$\text{Sample Time} = \frac{\text{Harmonic}}{\text{Resolution in Hz}} =$$

Harmonic x Time Base Period

$$\text{where Harmonic} = \frac{\text{RF Input Frequency}}{\text{ACTO Local Oscillator Frequency}}$$

$$\text{Resolution} = \frac{1}{\text{Time Base Setting (seconds)}}$$

The ACTO Local Oscillator Frequencies are:

Model 6316A = 33 MHz (low range)
Model 6316A = 100 MHz (high range)

$$\text{Thus, Sample Time} = \frac{\text{Input Frequency}}{\text{ACTO Frequency}} \times$$

Time Base Setting.

Example: An RF input of about 8.2 GHz is applied to the Model 6316A ACTO.

$$\text{Sample Time} = \frac{8200}{100} \times \text{Time Base Setting.}$$

For 8 digit presentation (100 Hz resolution), the Time Base Switch would be set to $10^{-2}$. The sample time would be about 0.8 sec, and the Accuracy of the reading is better than ±2 parts in $10^{-8}$ (±1 count, ± oscillator stability).

It is evident that the only limitation in accuracy is the ±1 count counting error, and the stability and absolute setting of the internal crystal. The 1 part in $10^9$ per day aging rate of the Systron-Donner High Stability Oscillator (Option B) assures a state-of-the-art measurement.

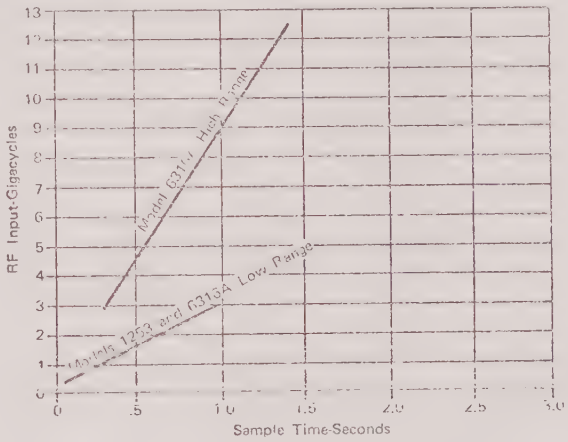


Measurement Time for 100 Hz Resolution Answers

## 3.6 OPERATING NOTES

### 3.6.1 Measurement Accuracies

The operational accuracy of electronic measuring instruments can be effected by any of several factors. The operator should understand them if he is to obtain the best results possible. The paragraphs which follow discuss these factors, and how to minimize their effects.

### 3.6.2 Oscillator Stability

The stability of the instrument's internal crystal-controlled oscillator is a significant factor effecting accuracy. Prime causes of instability are temperature variations within the oscillator circuit, fluctuations in line voltage, and aging.

Oscillator instability may be reduced to a minimum by the following techniques:

a) Leave the instrument on at all times. The aging rate of an oscillator is greatest when it is first turned on. As an example, the standard oscillator supplied with the SD Model 6316A Frequency Meter has an aging rate of 2 parts in $10^8$/24 hours, after 72 hours dynamic, and 7 parts in $10^9$/24 hours after 30 days dynamic.
b) Provide the instrument with a power source as free as possible from fluctuation.
c) Protect the instrument from sudden drafts or other rapid changes of temperature.
d) Have the oscillator calibrated frequently with a Frequency Standard. Periodic comparison against such a standard will enable the oscillator to be corrected for drift.

In those instances of need for measurements of extremely high accuracy, a Secondary Standard Oscillator may be connected to the rear panel 1 MHz input and used in lieu of the internal oscillator.

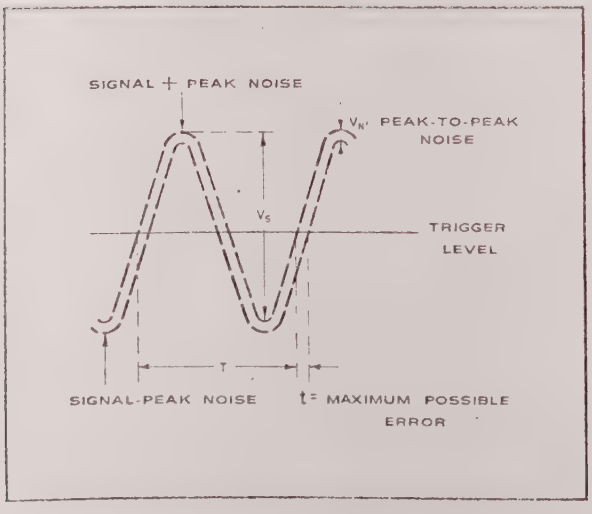


Figure 3-7. Gating Error

### 3.6.3 Gating Error

Gating is responsible for a possible error of ±1 count, in the least significant digit, in all types of measurements. This error is possible because the incoming signal passing through the count gate is not synchronized with the time base pulses which control the gate. As demonstrated in figure 3-7, the first or last cycle of the input signal may or may not pass through the gate to be counted, resulting in the possible error.

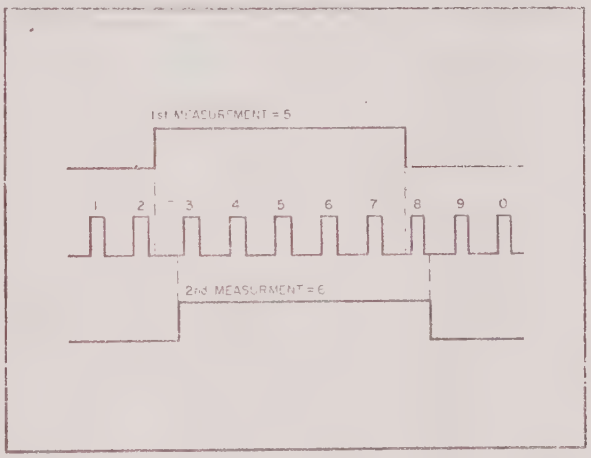


Figure 3-8. Count Error Due to Noise

### 3.6.4 Count Error Due to Noise

Noise superimposed on the input waveform may cause suprious count pulses to appear at the output of the amplifier and, consequently, to be counted. An output pulse occurs and is counted each time the input signal crosses and recrosses the selected trigger voltage level of the amplifier, as shown in figure 3-8. Since an input signal cycle must usually have amplitude of at least 0.2 to 0.3 volt p-p to cause triggering spurious counts can be eliminated by attenuating the total input-plus-noise signal to suitable amplitude. It is important to have both attenuator and trigger level controls set properly when measuring signals under marginal conditions of noise.

### 3.6.5 Loading Error

One frequently overlooked and generally not significant source of error may occur if the connection of the instrument to the external signal causes a frequency or amplitude shift of the external signal. This error will only be noticed with signal sources of relatively high impedance as compared to the input impedance of the counter.

For signals of sufficient amplitude, the loading error factor can be reduced by placing either a small coupling capacitor or a large resistor in series with the input signal. The isolating component should be located at the signal source so that it will also isolate the cable capacity.

# CHAPTER 4

# PRINCIPLES OF OPERATION

## 4.1 INTRODUCTION

The Model 6316A Frequency Meter consists of four basic elements:

+ Signal Input circuits
+ Counting and Display circuits
+ Frequency Function circuits
+ Time Base circuits

This chapter contains a detailed description of the operation of these circuits; first overall, and then section by section. Finally, a description of each Integrated Circuit (IC) used will be found at the end of chapter 5.

## 4.2 GENERAL THEORY

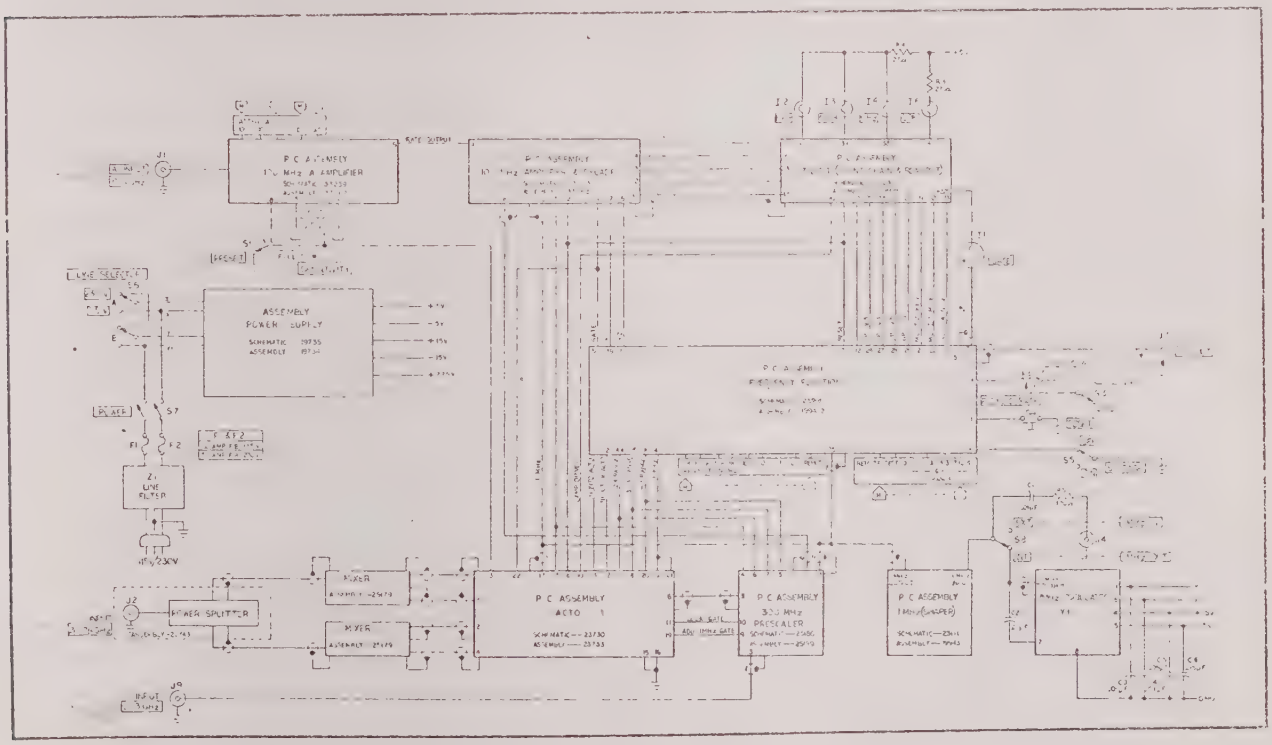


Figure 4-1. Block Diagram Model 6316A [25583]

The Model 6316A Frequency Meter accepts cw type input signals at any one of its three front panel input connectors, within the frequency range appropriate for that connector, and within the instrument's overall range of DC to 12.4 GHz. The signal is processed through the input stages, and arrives in the 100 MHz Amplifier & Decade circuit ready to be accurately gated and counted.

In the prescaler counting mode (.1-.3 GHz), the signal is processed through the 300 MHz Prescaler circuit, where it is divided-by-four by two cascaded Flip-Flops. The resultant then passes to the 100 MHz Amp & Decade circuit.

In the ACTO counting mode (.3-12.4 GHz), the signal is processed in the ACTO circuits, and a resultant representative signal is fed to the 300 MHz Prescaler assembly where it is processed before it passes to the 100 MHz Amp & Decade.

At the 100 MHz Amp & Decade circuit input, three reed relays, controlled by the front panel RANGE switch, are used to switch the input of the amplifier to the proper signal source. These are the 100 MHz A Amplifier, the 300 MHz Prescaler, or the 1 MHz Time Base signal used as the input signal in the TEST mode of operation.

The passage of the input signal is then further controlled by a count gate. The control voltage for the count gate is produced in the Frequency Function circuits. This count gate admits the input signal to the counting decades for a precise length of time during each counting cycle (from recycle rate control). The counting decades count the total number of signal pulses admitted by the count gate during the time the gate is open, and convert this count to a BCD logic output. The Count Chain and Readout circuit receives the BCD logic into its count chain

Upon receiving a transfer pulse from the Frequency Function circuits at the end of the count period, the information in the count chain is transfered to the storage binaries where it is immediately available to the readout circuits as a stored BCD representation of the count totalized by the counting decades. These readout circuits decode the BCD information and activate the representative digital display.

The frequency Function circuit board supports a series of magnetic reed switches whose operations are controlled by magnets mounted on the front panel RESOLUTION/Hz and RANGE switch arms. These switches provide selectable ground conditions for the NAND and NOR logic circuits which, along with time base pulses, provide the logic and precise timing needed for instrument operation.

A stable internal crystal oscillator produces the basic 1 MHz signal used for timing throughout the instrument. The standard unit provides an accuracy of $\pm 7$ parts error in $10^9/24$ hours after specified warm-up. Optional oscillators, available at extra cost, can increase this accuracy to $\pm 5$ parts error in $10^{11}/24$ hours after warm-up. An external oscillator, such as a Frequency Standard, may also be used when greater accuracy is required.

4.3.1 100 MHz A & B Amplifier (Schematic #33259, Ass'y #33262)

Model 6316A Bottom View

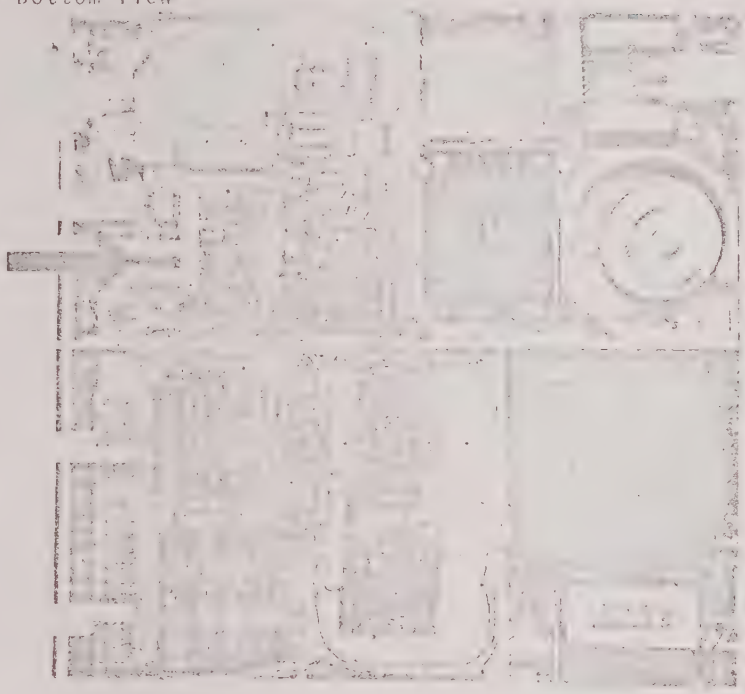

100 MHz A Amplifier

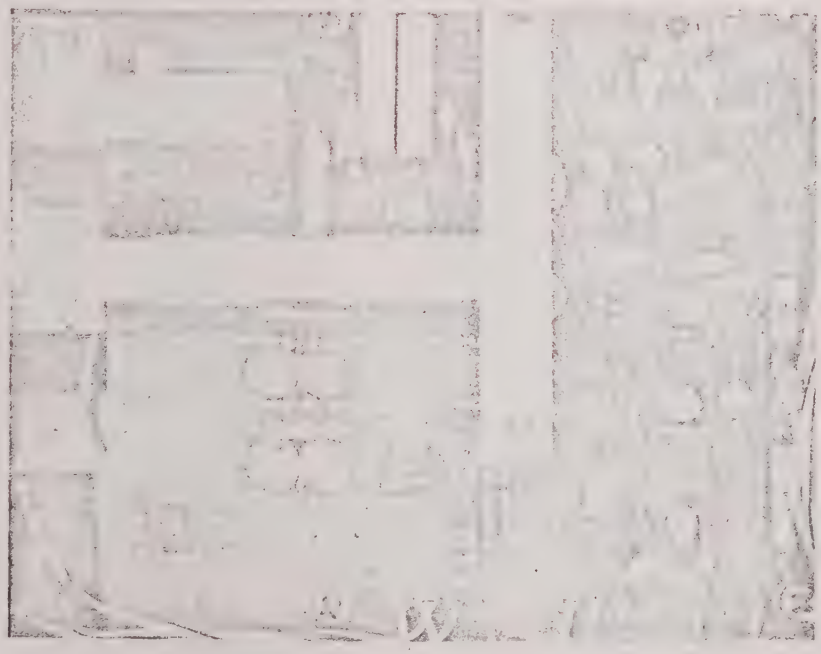

Figure 4-2. 100 MHz A Amplifier, Location

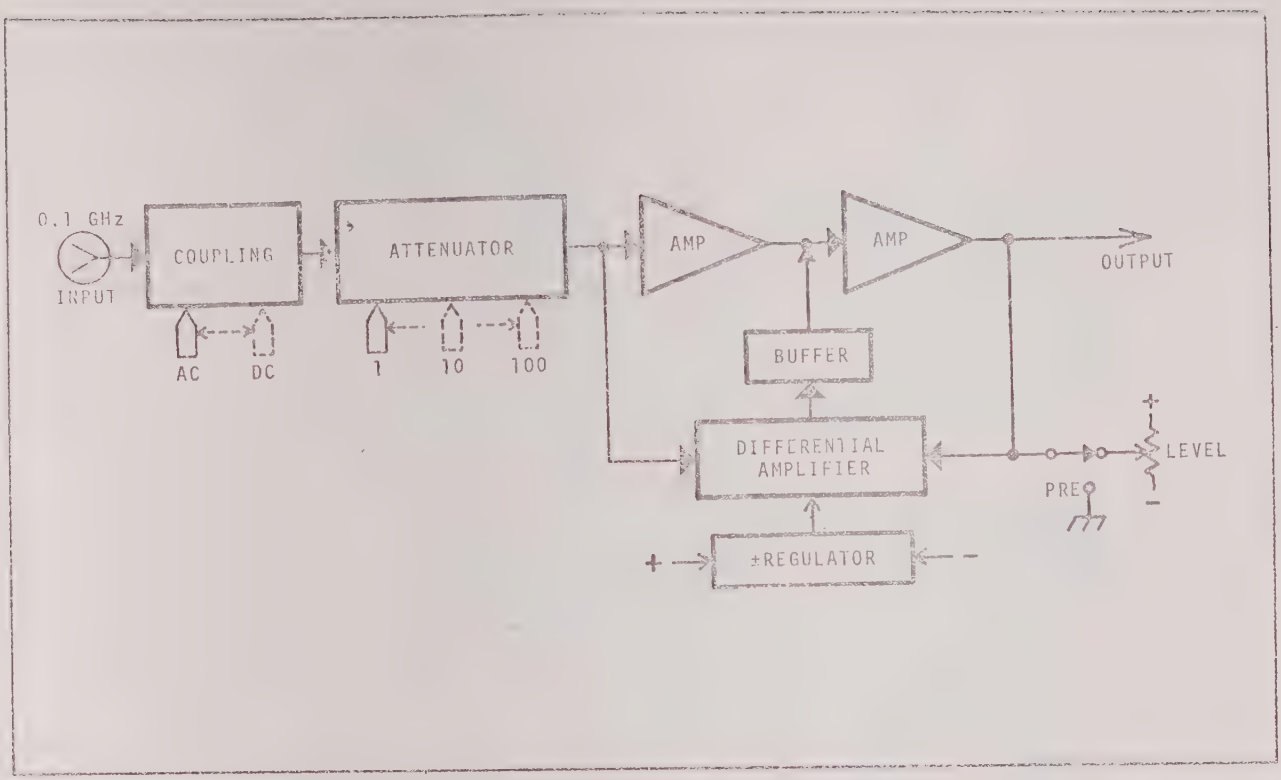


Figure 4-3. 100 MHz A & B Amplifier, Block Diagram

NOTE

This PC assembly is common to several Systron-Donner instruments. Not all of the circuits present are used in this instrument.

This circuit is basically an impedance changing network. It has a voltage gain of approximately 0.7, but a very high current gain. It displays a 1 megohm impedance at the input of push-pull FET's Q1 and Q4, and a 50 ohm impedance at the output at pin 9. It features dc level stability, and speed at high frequencies.

Incoming signals are fed from the 0-.1 GHz front panel input connector, through the AC-DC coupling network, through the 1-10-100 ATTENuation network, to the push-pull amplifier Q1/Q4. The output of this stage is coupled to complimentary emitter followers Q2/Q5-Q3/Q4, along with the output of the differential amplifier through buffer Q7. The output of the emitter followers, which is the output of this circuit, is fed back to one side of the differential amplifier at the gate of Q12. Along with the output of the trigger level circuit. The input signal is tied to the opposite side of the differential amplifier at the gate of Q9. This circuit compares the dc level of the output which must remain constant with that of the input, and inserts ± offset voltages to compensate for high and low input levels. The PRESET trigger function clamps the output to near the 0 level. Transistors Q10 and Q11 and their circuits act as dynamic power supply regulators and filters for the differential amplifier circuits.

4.3.2 300 MHz Prescaler (Schematic #25186, Ass'y #25189)

Model 6316A Bottom View

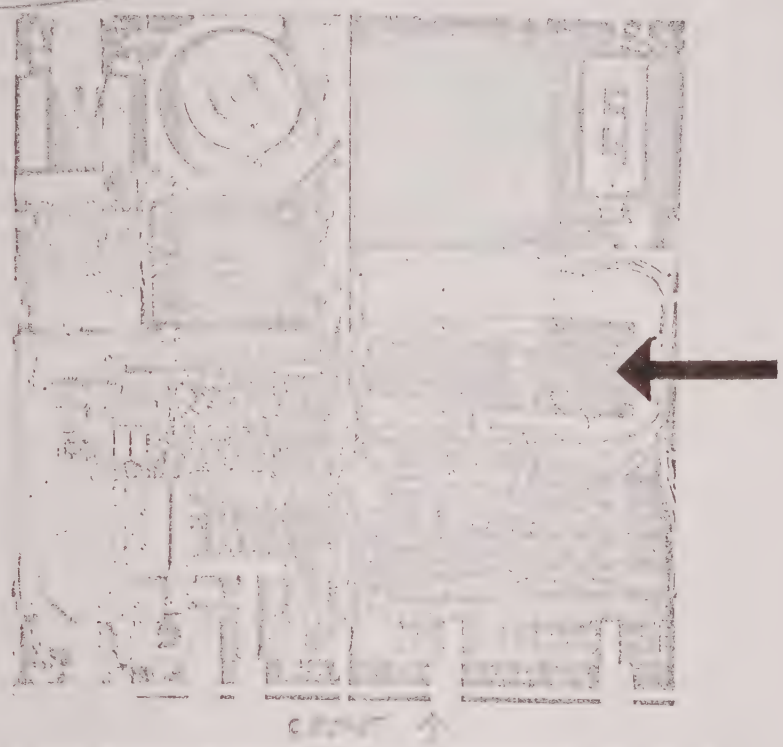

300 MHz Prescaler Assembly

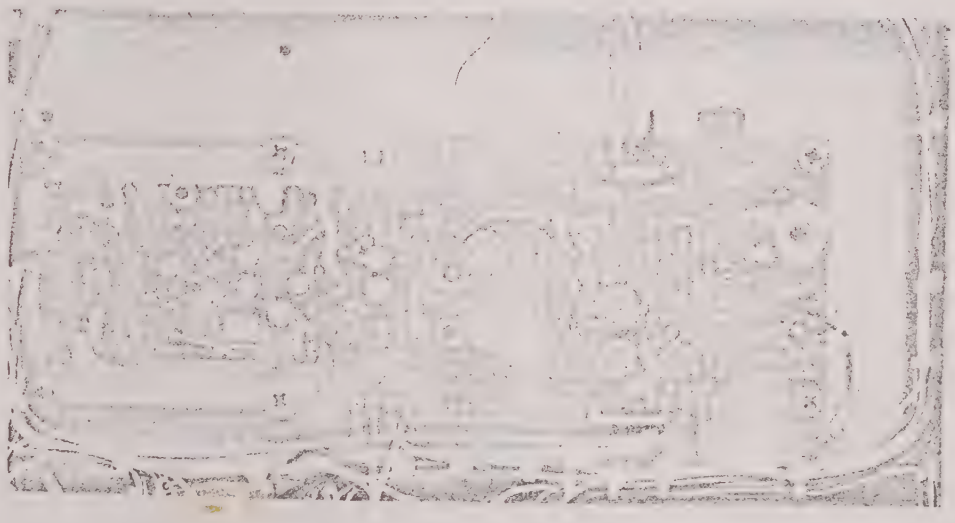

Figure 4-4. 300 MHz Prescaler, Location

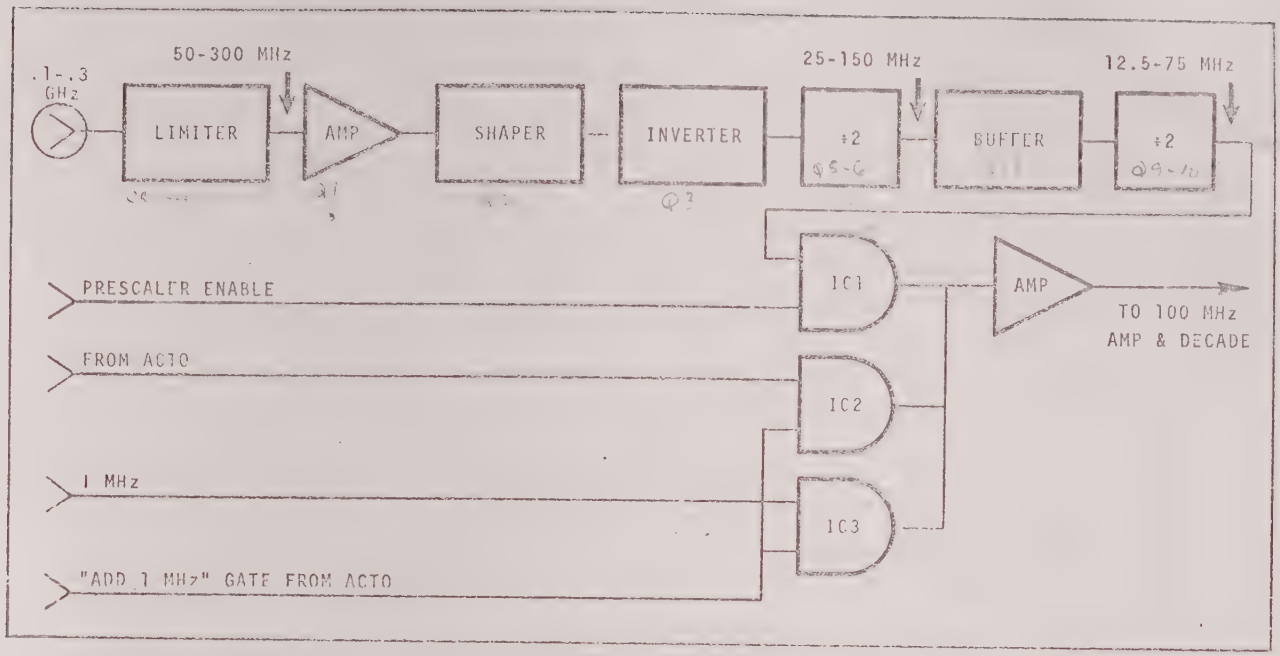


Figure 4-5. 300 MHz Prescaler, Block Diagram

As seen in the block diagram, the 300 MHz Prescaler circuit is simple and straight forward. It divides by four any frequency between 50 and 300 MHz applied to its input. The resultant 12.5-75 MHz output is then coupled to the next stage through an IC logic gating circuit. This gating circuit is also used in the processing of count signals from the ACTO circuits when the instrument is being used in the .3-12.4 GHz range.

The input signal, applied to pin 3, is first limited by the diode bridge CR1-2-3-4, and then applied to amplifier Q1. The collector of Q1 is coupled to the cathode of tunnel diode CR5. CR5 is biased with a load line such that it has two stable states, represented by points A and B on the curve shown in figure 4-6.

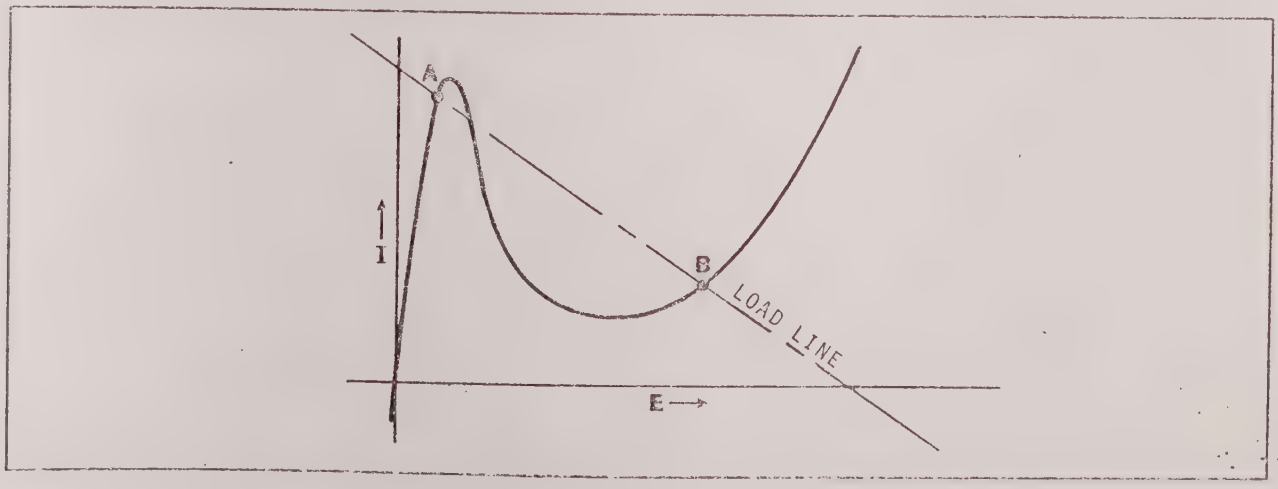


Figure 4-6. Tunnel Diode Curve

Any negative excursions of current flow will force the tunnel diode CR5 into the high voltage state at point A. Positive excursions will cause CR5 to be driven down to the low voltage state at point B.

Negative going voltages present at the cathode of CR5 will be coupled through R19 to the emitter of Q2, a grounded base amplifier. The square waves of current made available at the collector of Q2 are differentiated by inductor L3, and the resultant pulses coupled through R63 to the base of Q3. Tunnel diode CR6 sharpens the negative going pulses while damping out the positive going pulses. These negative pulses, inverted by Q3, drive the emitters of Q5 and Q6 which form the 300 MHz binary. Initially either Q5 or Q6 will be in the "on" state, and the other will be in the "off" state. A positive pulse on their common emitter line will cause a reversal of state, and can be accomplished at a rate exceeding 300 MHz.

The grounded base transistor Q17 acts as a buffer between the binary and any load, while Q16 balances its base-emitter offset voltage against the voltage generated by the base-emitter junction of Q17.

L9 differentiates the square wave output from Q17 and the 300 MHz binary.

The resultant negative pulses are amplified and inverted by Q7, and then coupled to the common emitters of Q9 and Q10. Q9 and Q10 form the second binary, and can divide by two up to a maximum frequency exceeding 150 MHz. The output of this second binary is taken from the junction of R34 and R35, and is coupled through C19 to pin 2 of IC1 in the gating circuits.

When the prescaler is to be used, pin 7 of IC1 must be grounded. Placing the front panel RANGE switch in the .1-.3 GHz position supplies this ground from the Frequency Function circuits through pin 5 to the base of Q18. This ground applies voltage to the base of IC1's transistor A permitting amplification of the prescaler signal, which is then gated out through IC's pin 6 to the base of Q11. The collector of Q11 is coupled to pin 1 via the cascaded emitter followers Q12, Q13, Q14, and Q15. Removing the ground from IC1 pin 7 blocks passage of the prescaler output signal.

IC2 and IC3 process signals from the ACTO circuits, and will be discussed in that section. A discussion of each type IC will be found in Chapter 5.

4.3.3 .3-12.4 GHz ACTO (Schematic #23730, Ass'y #23733)

Model 6316A Top View

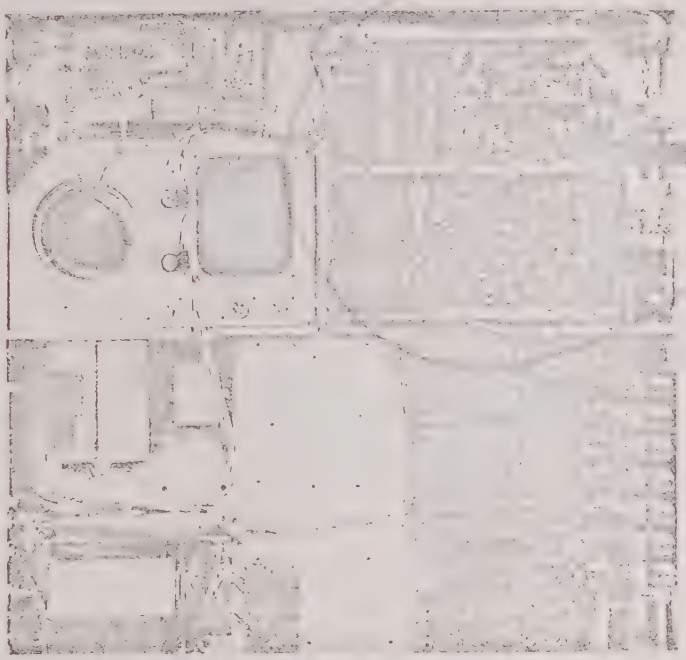

ACTO Location (Top cover plate removed)

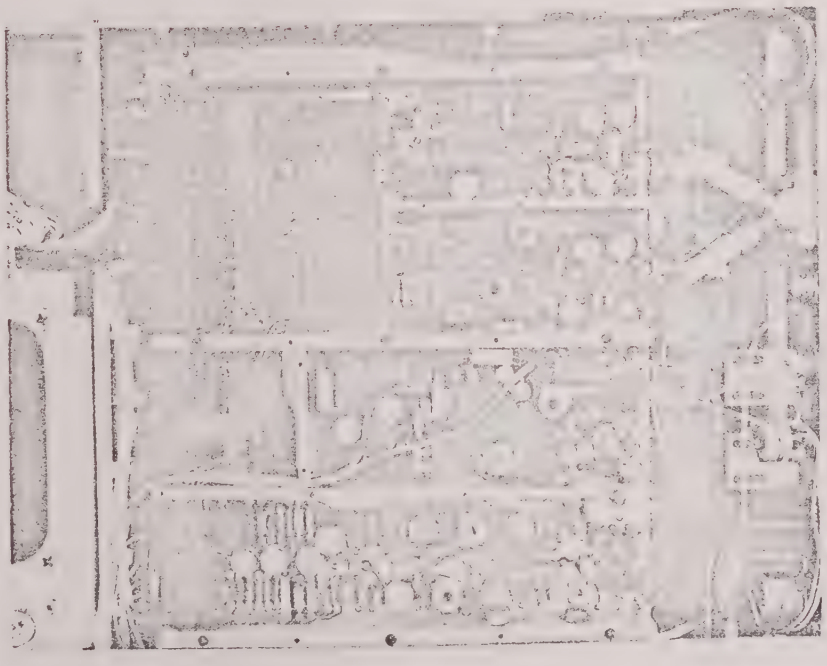

Figure 4-7. .3-12.4 GHz ACTO, Location

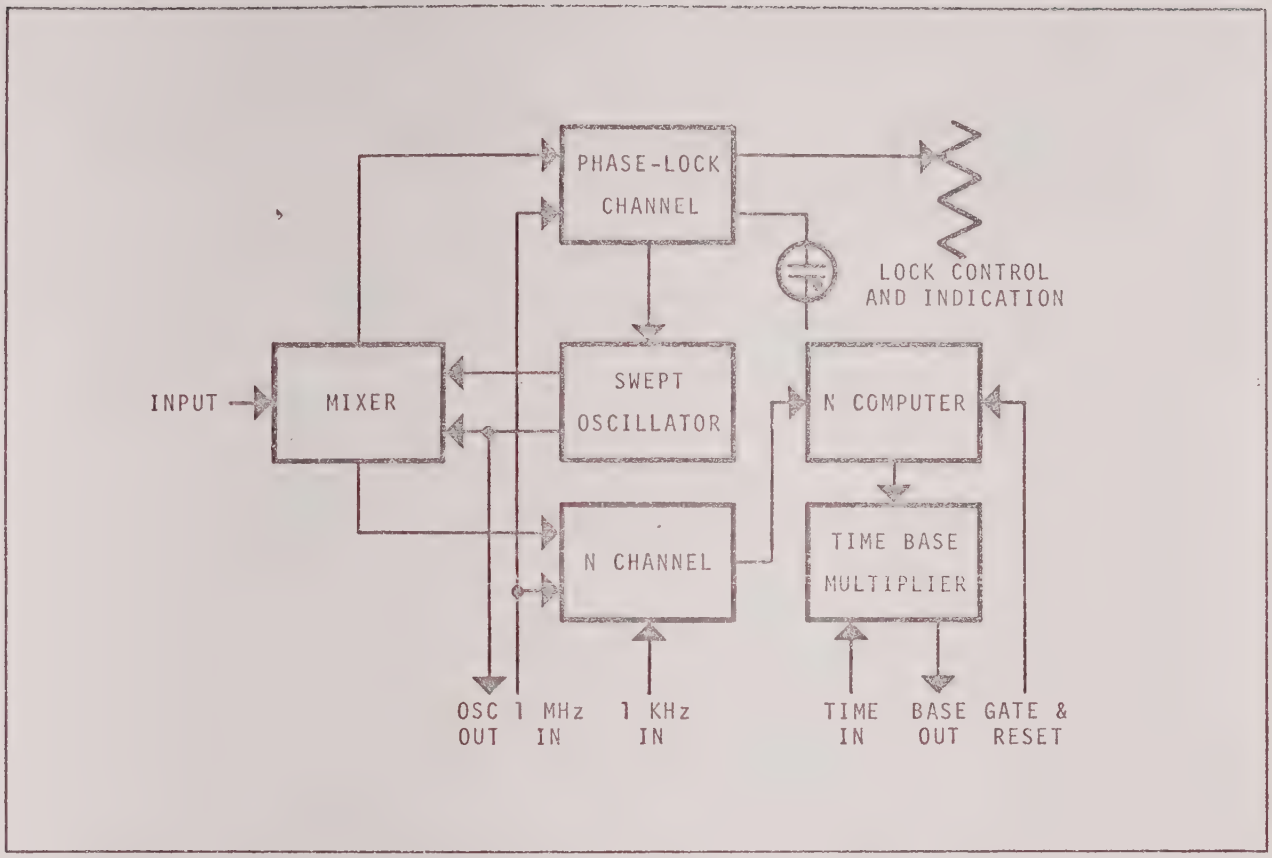


Figure 4-8. .2-12.4 GHz ACTO, Basic Block Diagram

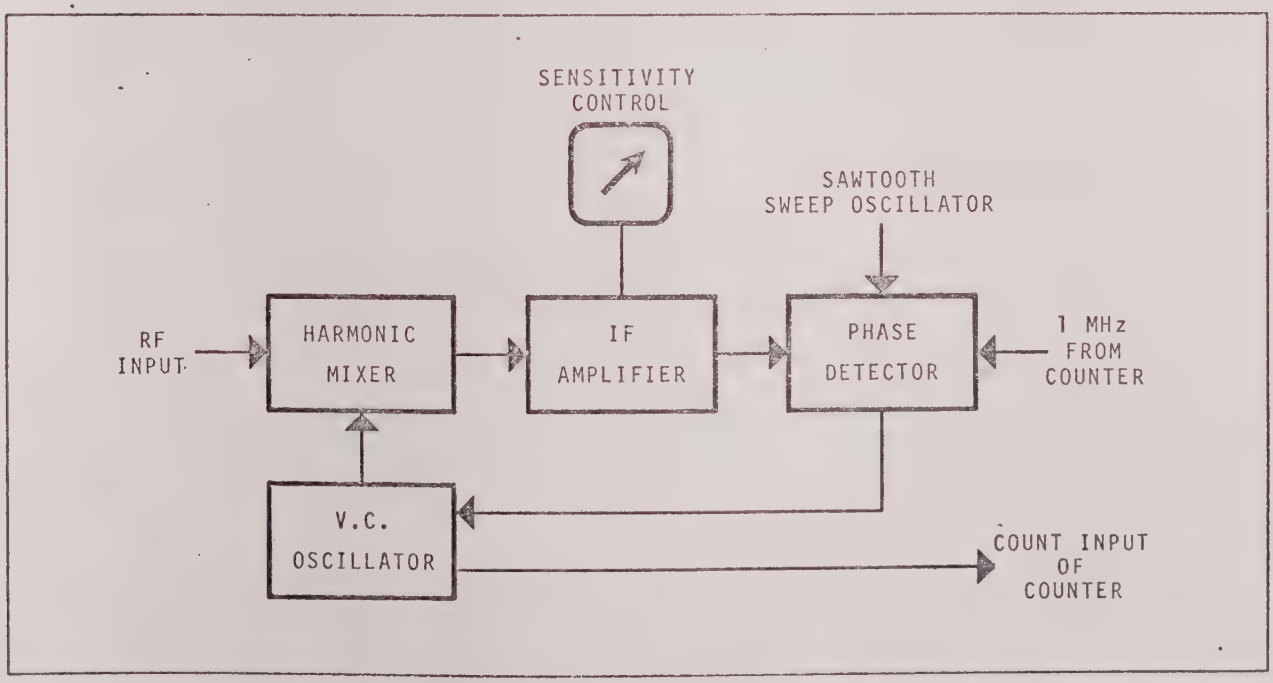


Figure 4-9. ACTO Phase Lock Channel, Block Diagram

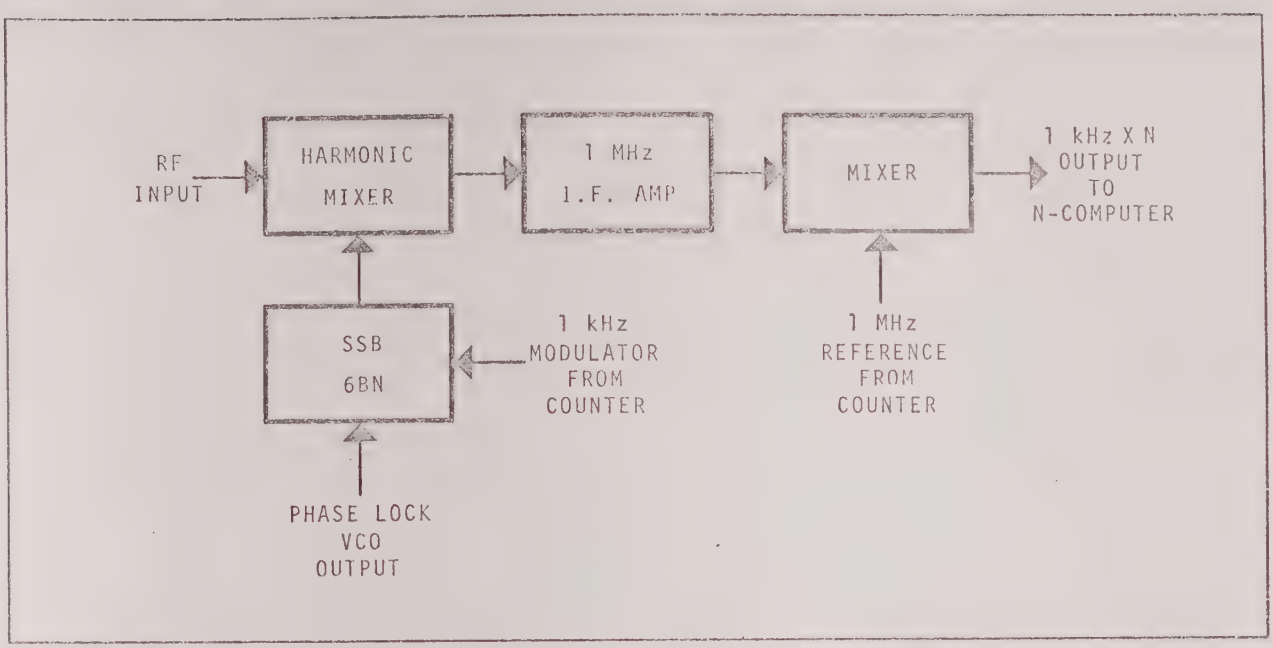


Figure 4-10. ACTO N-Channel, Block Diagram

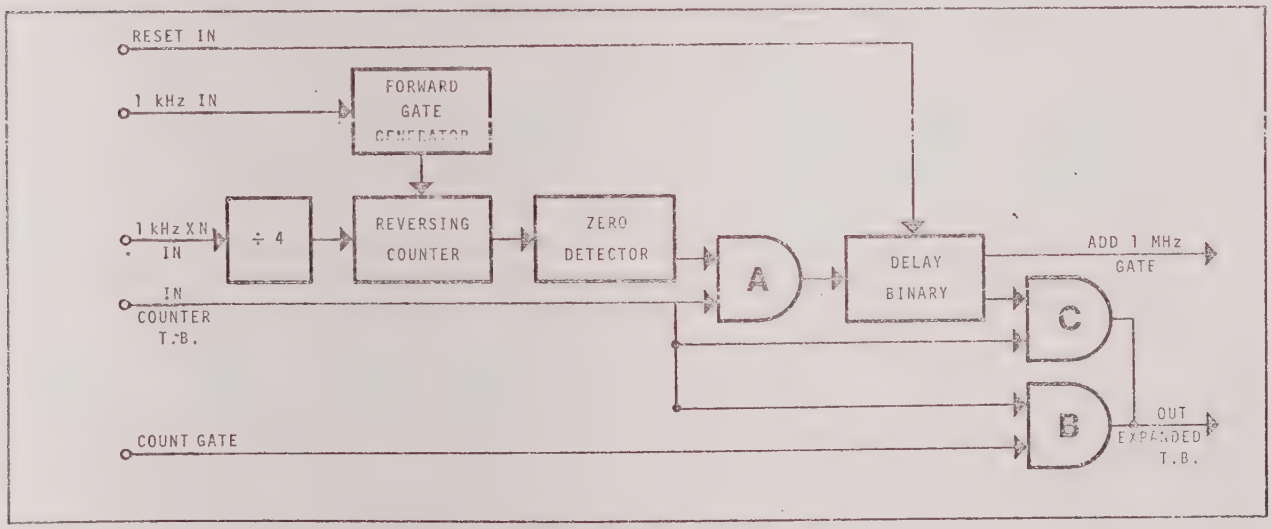


Figure 4-11. ACTO N-Compute, Block Diagram

Figure 4-10 shows the basic diagram for the ACTO. It uses an oscillator, a harmonic mixer, an IF Amplifier, and a phase detector to constitute a phase lock loop. In the absense of any RF input signal, or in the case where the sensitivity control is turned to minimum, there is no signal present on the output of the IF Amplifier. The sweep oscillator is free to run, thereby sweeping the oscillator over a narrow band of frequencies.

Any of several harmonics of this oscillator are capable of mixing with the RF signal to provide a one megahertz IF signal. If an RF signal is present and the sensitivity is increased, one of these

harmonics will produce an IF frequency of one megahertz. This signal is then phase-compared to the one megahertz from the counter. When this happens DC is generated on the output of the phase detector and this voltage controls the oscillator, providing a phase lock. As soon as this occurs, the sweep oscillator is overridden and is no longer able to sweep the oscillator. Thus, the oscillator is tuned to a frequency which is an exact sub-multiple of the input frequency with a one MHz offset.

A second output from the oscillator is applied to the count input of the counter so that the counter can measure the exact frequency of this oscillator.

Figure 4-8 shows a more complete block diagram of an automatic transfer oscillator, which includes components being measured. In this case a third output from the oscillator is used to drive a single side band generator. This generator is modulated at a 1 kHz rate. The resultant output of this side band generator is equal to the oscillator frequency shifted in frequency by 1 kHz. This shifted frequency is then amplified and applied to a second harmonic mixer. The RF input is applied to both harmonic mixers by a means of resistive power splitter. When the first channel (called the lock channel) achieves a phase lock, it produces an exact 1 MHz IF, since it is phase locked to 1 MHz. However, the output of the second harmonic mixer would not be exactly 1 MHz, because the signal driving this mixer is one kHz different from the first.

The actual output frequency would be 1 MHz, plus or minus 1 kHz times the harmonic number. For example, if the RF signal is mixing with the 100th harmonic of the oscillator, it also must be mixing with the 100th harmonic of the output of the single side band generator. This 100th harmonic is different in frequency by 1 kHz times this harmonic number (N) or 100 kHz. The resultant IF frequency is either 900 kHz or 1100 kHz, which is amplified in the IF amplifier and applied to a mixer and mixed with 1 MHz. The different frequency is one kHz times (N).

The function of the N-Computer portion of the ACTO circuit as shown in Figure 4-11, is to gate out the VCO signal, to extract "N" from the 1 kHz x N input, and to expand the counter's time base as required for an accurate count.

Since the original 1 kHz modulation frequency and the 1 kHz x N frequency are both present, it is possible to compare the two digitally and extract "N". Having done this, the circuit expands the counter's time base period by the factor N + 1, and generates an "add 1 MHz" gate. During the N time base period, the counter counts the 1 MHz frequency for an additional time base period, and the cumulative total count is displayed by the counter. The additional counting of 1 MHz compensates for the 1 MHz error introduced in the IF stages.

Gating of the VCO frequency and the 1 MHz takes place in the 300 MHz Precaler in IC's 2 and 3.

The Sweep Oscillator (Schematic #23730, sheet #3)

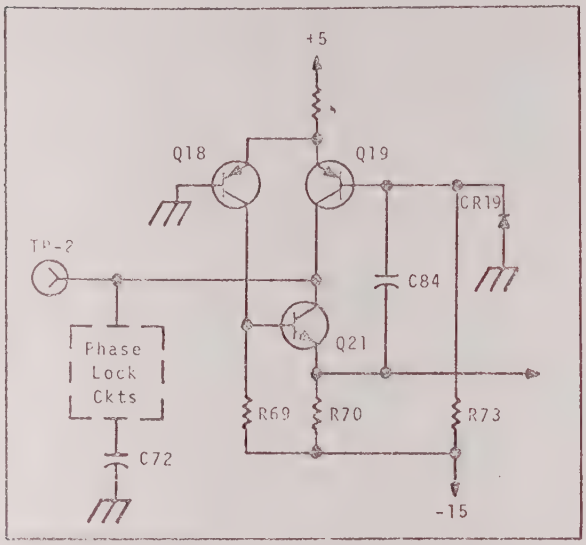


Figure 4-12. Sweep Oscillator, Schematic

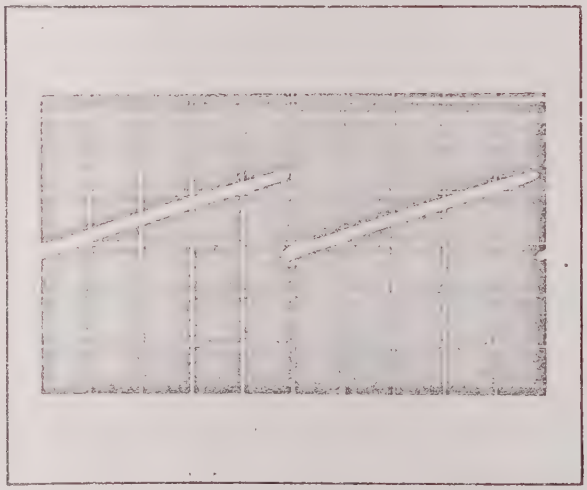

Figure 4-13. Sweep Oscillator, Wave Form

At the start of a cycle in this circuit, Q19 in on, and drawing base current through R73 from the -15V supply. In this condition, Q19 takes all the available current through R67, which holds Q18 in the off condition. Q21 will also be off, so that Q19 will have to obtain its collector current from capacitor C72 in the VCO circuit. The path from C72 to Q19 leads through the Phase Lock Detector circuits which act as a switch during phase lock to stop the sweep oscillator.

As C72 charges towards plus 15 volts, it tunes the VCO down in frequency until Q19 becomes saturated. When this happens, Q19 must obtain all of its emitter current through its base circuit. This current flow is held to a small value by R73 which will allow the emitter voltage to rise. As a result, Q18 will begin to receive emitter current and will turn on. When Q18 is turned on, its collector current is felt on the base of Q21, turning it on. The emitter of Q21 drives the base of Q19 positive, through C84, which turns it off, and Q18 turns on harder. The collector of Q21 supplies ample current to discharge C72 and C84 rapidly. The discharge of C72 drives the dawtooth waveform to near minus 15 volts. The discharge of C84 permits Q19 to turn on again, to repeat the cycle. The cycle is repeated until a phase lock occurs to stop it.

In the Lock Gate circuit, Q23 is held on during the time C72 is being charged and the sawtooth ramp is going positive. With Q23 on, capacitor C85 will hold the gate of Q22 closed (off). This condition remains as long as the Sweep Oscillator is running. When the Sweep Oscillator stops due to phase lock, Q23 turns off, C85 charges toward +15, Q22 turns on, and Q20 turns on to open the LOCK gate, and to provide a voltage to operate the front panel LOK lamp.

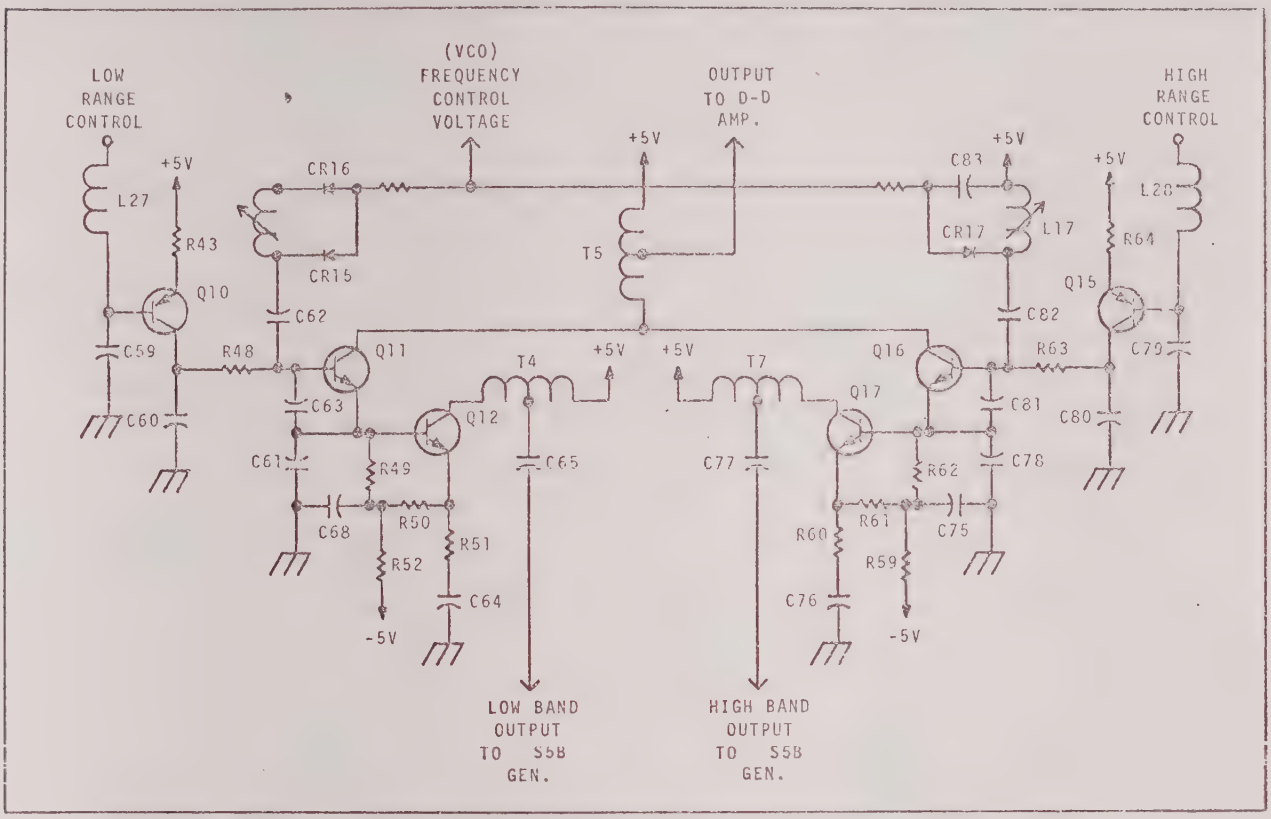


Figure 4-14. Voltage Controlled Oscillator (VCO), Schematic

The VCO is actually two separate oscillator circuits, a low band (30-33 MHz) and a high band (98-100 MHz), both controlled from a common sweep oscillator input and feeding a common push-pull output. Q11 is the low band oscillator, and A16 is the high band oscillator. Since both operations are similar, only the low band circuits will be discussed.

When the front panel RANGE switch is placed in the .3-3 GHz (low) ACTO range position, a ground appears on the base of Q10 turning it on. Q10 turns Q11 on. A11 and its associated components form a conventional Colpitts oscillator circuit whose tank circuit includes varicap diodes CR15 and CR16 as its capacitive element. The rising sawtooth of voltage from the sweep oscillator increases varicap capacitance, and so sweeps the VCO frequency downwards. Circuit values are selected to produce an output in this section varying between approximately 30 and 33 MHz.

The main output of the oscillator is taken from the collector of Q11, and is transformer coupled through T5 to a push-pull output amplifier Q13/Q14. The amplified output is then transformer coupled through T6 to the lock channel mixer at terminal 2, and to a voltage divider. The divider, consisting of R56 and R58, attenuates the output level available on terminal 6, which is supplied to the counter.

A second output is taken from the oscillator through the emitter of Q11 and fed to the base of Q12. Q12, acting as a buffer amplifier, supplies the oscillator output to the low band portion of the single side band generator circuit at IC29/IC30.

The 1 kHz Filter (Schematic #23730, sheet #3)

This circuit consists of Q24, Q25, Q26, Q27 and their associated components. It works to first filter out all unwanted frequencies from the 1 kHz input, and then to produce two outputs separated by 90° in phase.

Single Side Band Generator (SSB) (Schematic #23730, sheet #3)

The 1 kHz signal is applied to the base of Q27 through R88 and R85. The collector of Q27 is coupled to the gate of source follower Q24 through a twin-T filter made up of R78/R70/C86 and C88/C130/R80. The source of Q24 is coupled back to the base of Q27. This circuit provides 100% negative feedback to all frequencies except 1 kHz. The 1 kHz output is coupled through C89 to isolation/phase-shift amplifiers Q25 and Q26, where dual 1 kHz signals are produced separated in phase by 90°. A pair of these signals is fed to each portion of the SSB Generator circuit.

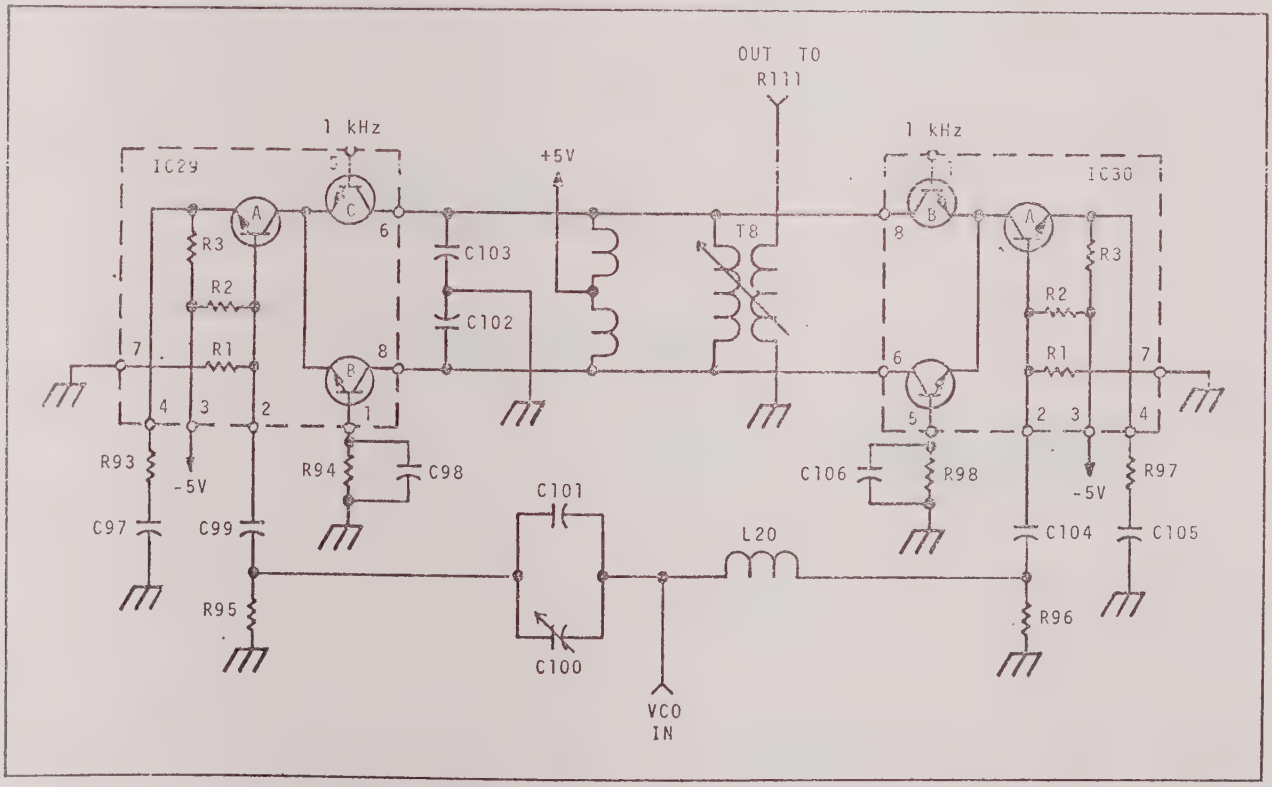


Figure 4-15. Single Side Band Generator (SSB), Schematic

The function of this circuit is to shift upward by precisely 1 kHz the signal frequency received from the VCO. Like the VCO, this circuit is really two nearly identical circuits whose operations are very similar. Therefore, only

the low band portion will be discussed.

The input from the VCO is coupled to terminal 2 of IC29 through a capacitive phase lead network (C100/C101), and to terminal 2 of IC30 through an inductive phase lag element (L20(. The net result is VCO input signals to the two IC's 90° out of phase.

The two out-of-phase 1 kHz signals from the 1 kHz Filter are also fed to the IC's. Since the operation of the IC's is identical, only IC29 will be discussed.

In IC29, when the signal on terminal 5 is 0 volts, the outputs at terminals 6 and 8 are balanced and no output is available from the secondary of T8. The VCO signal, which is fed to terminal 2, will therefore appear at T8 only when terminal 5 is not 0 volts, and will be proportional to its departure from 0 volts. The RF contained in odd numbered half-cycles is 180° out of phase with the RF contained in even numbered half-cycles.

The similar output from IC30 also appears on the secondary of T8. However, since all inputs to IC30 are 90° out of phase with their IC29 counterparts, the phase of the resultant composite signal on the secondary of T8 will be 0° then 90°, 180°, 270° and back to 0°. This phase rotation will occur at a 1 kHz rate and result in a frequency equal to the VCO frequency shifted upward by 1 kHz. The 1 kHz adds to the VCO frequency due to the overall rotating phase relationship of the four inputs, as shown in Figure 4-16.

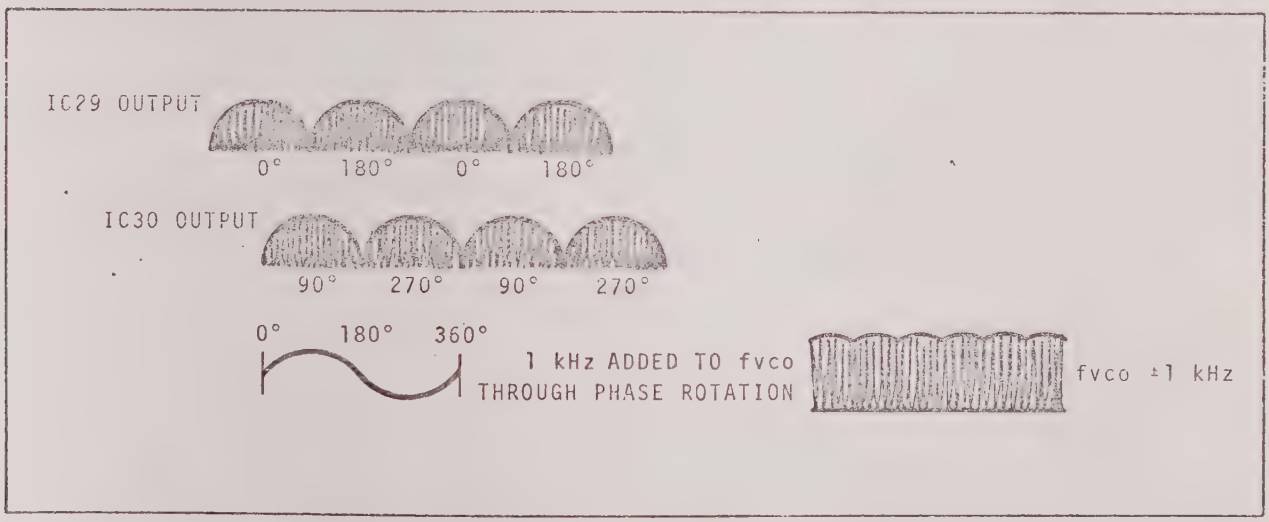


Figure 4-16. Rotating Phase Relationship, Wave Form

The IC29/IC30 low band signal is fed to the base of Q28 through R111. The IC31/IC32 high band signal is fed to the base of Q28 through IC21. The collector of Q28 is transformer coupled through T10 to push-pull amplifier Q29/Q30. The output of this stage is likewise transformer coupled out and is available on terminal 1 from where it is used to drive the N-Channel Mixer.

IF Amplifier Circuits (Schematic #23730, sheet #2)

The ACTO circuit includes two nearely

identical IF Amplifier circuits which amplify the output signals from the Phase-Lock and N-Channel mixers. The SENSITIVITY control is tied into the first stage of the lock channel IF circuit.

The output of the mixer is coupled through R120 and C27 to terminal 2 of IC27. IC27 is connected to operate as a single-ended two stage amplifier, with the bandwidth increased by damping L7 with R20, and is fed to IC28. IC28 is a multi-stage high gain amplifier/limiter which further amplifies the IF signal for use in driving the next stages.

## N-Channel IF Mixer

The N-Channel IF Amplifier is similar to the lock channel IF. The output of the N-Channel IF amplifier, at IC26 terminal 5, is coupled to a balanced mixer circuit at the secondary center-tap of transformer T1. A 1 MHz signal from the counter, through Q7, is fed to the primary of T1. The mixer output becomes 1 kHz x N. It passes through a low pass filter, composed of C20/L5/C18/C21/C19, to the Q2/Q3 schmitt trigger circuit. This circuit shapes the 1 kHz x N signal for use in the N-Compute circuitry.

## Lock Channel Phase Detector

This circuit includes two separate but similar phase detector circuits. The "Phase Lock" phase detector includes T2, CR9, CR10, Q6, and other associated components.

The "Phase Lock Error" phase detector circuit includes T3, CR11, CR12, Q5, and other associated components.

Figure 4-17 shows a simplified version of the "Phase Lock" detector circuit.

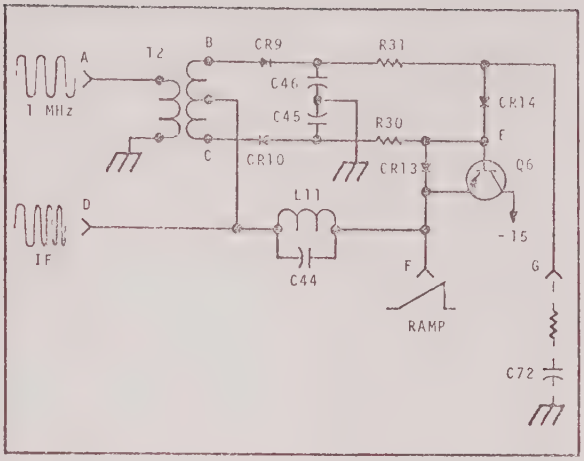


Figure 4-17.
"Phase Lock" Phase Detector, Schematic

The "Phase Lock" phase detector is a circuit which compares a 1 MHz reference frequency with the IF frequency from the lock channel mixer, and developes a voltage which isproportional to the phase difference between these two frequencies. This voltage appears between the IF input (D), and the base of Q6 (E). Q6 amplifies this voltage and, as the phase difference between these points becomes constant, supplies current to ramp generator Q19 in the sweep oscillator and stops the sweep.

Without an RF input there is no IF signal from IC28, and the current produced for the ramp generator pulls the emitter of Q6 toward +15 volts. While most of this current passes through the L11/T2 part of the circuit, some passes through Q6 and CR14, holding Q6 off. This current charges C72, to produce the positive sawtooth of voltage used to sweep the VCO.

When an RF signal is applied to the ACTO, the resultant swept IF will generate many zero beats with the 1 MHz reference frequency. As the SENSITIVITY control is increased (cw - to +), these zero beat signals will become larger and

larger, so that when a true zero beat is obtained, the phase difference between IF and reference will cause the voltage on the base of Q6 (E) to become negative. This turns Q6 on, and all the current from the ramp generator Q19 (F) will be absorbed by Q6. When this happens C72 stops charging and holds its charge level. This steady state of C72 holds the VCO on-frequency to maintain the phase lock condition. Anything which might change the phase relationship between IF and reference will cause the detector to shift the VCO slightly to cancel the effects of the change.

A visualization of phase lock occuring can be obtained as shown in Figure 4-18.

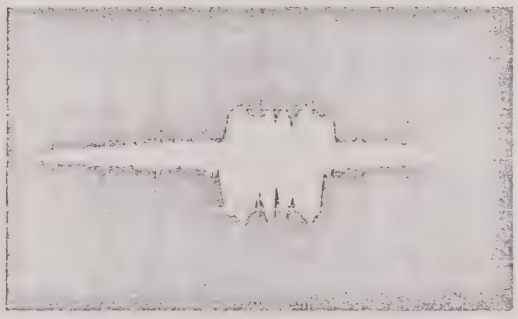

Figure 4-18a.
Zero Beat Before Phase Lock, Wave Form

Figure 4-18b.
Zero Beat After Phase Lock, Wave Form

Figure 4-18. Zero Beat Phase Lock, Wave Form

Figure 4-18a shows the zero beat signal condition just prior to the occurance of a phase lock. Figure 4-18b depicts the signal with phase lock having occured. The following procedure may be used to duplicate the illustrations with your instrument:

1. Apply a 3 GHz signal at -15 dBm to the counter.
2. Set the oscilloscope to EXT. HORIZ. Apply the signal from ACTO TP2 to the oscilloscope horizontal input.
3. Apply the ACTO TP1 signal to the oscilloscope's vertical input.
4. Set the SENSITIVITY control full ccw, but not into detent. Observe a signal similar to Figure 4-18.

NOTE

The number of zero beats observed is determined by the input frequence and the selected ACTO range.

5. After obtaining correct display, slowly rotate the SENSITIVITY control cw until the LOK annunciator lights.
6. Observe that the oscilloscope display has collapsed to one vertical line located on the leading edge of the second pulse of one of the displayed zero beats.

Phase Lock must be made on the correct side band. Should the lock-on be incorrect, the counter would display an answer 2 MHz too high. To prevent this, the "Phase Lock Error" phase detector circuit was included. This circuit operates much like the Phase Lock circuit, except that its 1 MHz reference signal, fed to T3 from Q9, is 90° out of phase with that supplied to T2 from Q8. A negative output at the base of Q5 indicates that phase lock has occured on the wrong side band. In this case, Q5 turns on to prevent Q6 from clamping the sweep ramp, and creating an erroneous phase lock.

N-Compute Circuits (Schematic #23730, sheet #1)

The N-Compute circuits convert the 1 kHz x N signal from the N-Channel IF amplifier to a number N. When the counter is gated on to count the VCO frequency, the number N is used to multiply the counter's measurement period so as to make the displayed reading a direct representation of the RF being measured.

In operation, when the ACTO is phase locked to the unknown RF input, the counter's reset pulse enables this circuit to initiate the computation.

Upon receipt of a reset pulse, decade IC21 is reset, which enables the gate IC23D, through IC24A, allowing IC21 to begin counting the 1 kHz pulses present at terminal 21. IC21 counts these pulses until it reaches the count of 9. IC24A detects the 9-count, and turns IC23D off to stop IC21. The output of IC24A is also the forward gate, which is applied to the forward-reverse binary counter IC1-IC8 enabling a forward count as long as IC21 is counting. When IC21 reaches the count of 4 it enables the JK lines of the dual JK flip-flop IC14, permitting IC14 to accept the 1 kHz x N signal and divide it by 4. The resultant $\frac{1\,kHz \times N}{4}$ signal is then counted in the forward direction into the forward-reverse counter. IC14 is stopped when IC21 reaches the count of 8. IC14 has thus been dividing the input by 4 for a period of 4 msec (between IC21's counts of 4 and 8), resulting in the expression $\frac{(1\,kHz \times N)}{(4\,kHz)}$ 4. When this expression is simplified only N remains, which is the number stored in the forward-reverse counter.

Approximately 50 msec after the reset pulse, the counter is able to accept a start pulse. Upon receipt of a start pulse, the gate line (terminal 22) goes to the "1" state. This enables IC16A and allows the time base pulses to go through IC16C, IC18B, IC18C, IC16A, and out through terminal 12 back to the counter. The first pulse will cause the counter's gate to open, bringing terminal 22 to the "0" state, disabling IC16A. Subsequent time base pulses will leave IC18B and go through IC10B to drive the forward-reverse counter in the reverse direction. The counter will then count from N back toward zero. A coincidence circuit of IC24B, CR1, CR2, CR3, and CR4, detects when the reversed counter reaches zero. At this point IC22D pin 11 goes to the "1" state, which permits the next time base pulse to pass through IC22A and drive the JK flip-flop IC19. This occurs when the counter gate has been open for N time periods. During this time the counter has been counting the ACTO's VCO frequency. To obtain a direct indication of the unknown RF frequency, 1 MHz must be added to the reading. IC19 operates the two gate circuits IC2 and IC3 in the 300 MHz Prescaler circuit. In operation, the VCO drive to the counter is turned off at the end of the N per-

iod, and the 1 MHz signal is turned on and counted for one additional time base period. The next time base pulse through IC18A and IC16B to terminal 12 stops the counter.

The Q1 circuit supplies a "clear" signal to IC19, at the end of the N period, which is coincident with the trailing edge of the controlling pulse. This permits the "add 1 MHz" gating to occur without allowing the controlling stop pulse to actually stop the counter. The next time base pulse feeds through to stop the counter after the "add 1 MHz" gate.

4.3.4 Frequency Function (Schematic #23388, PC Ass'y #19941)

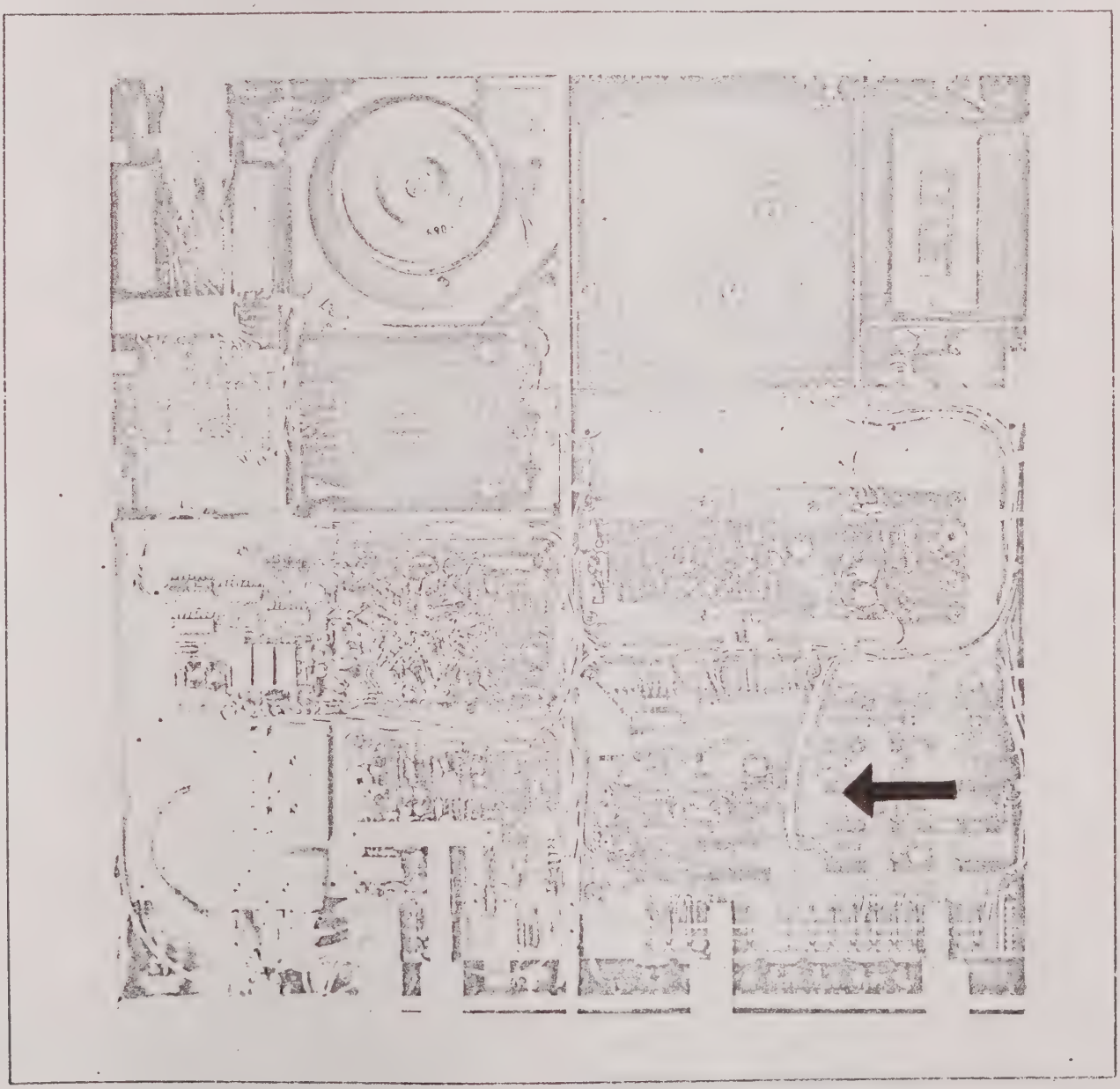

Figure 4-19. Frequency Function Board, Location

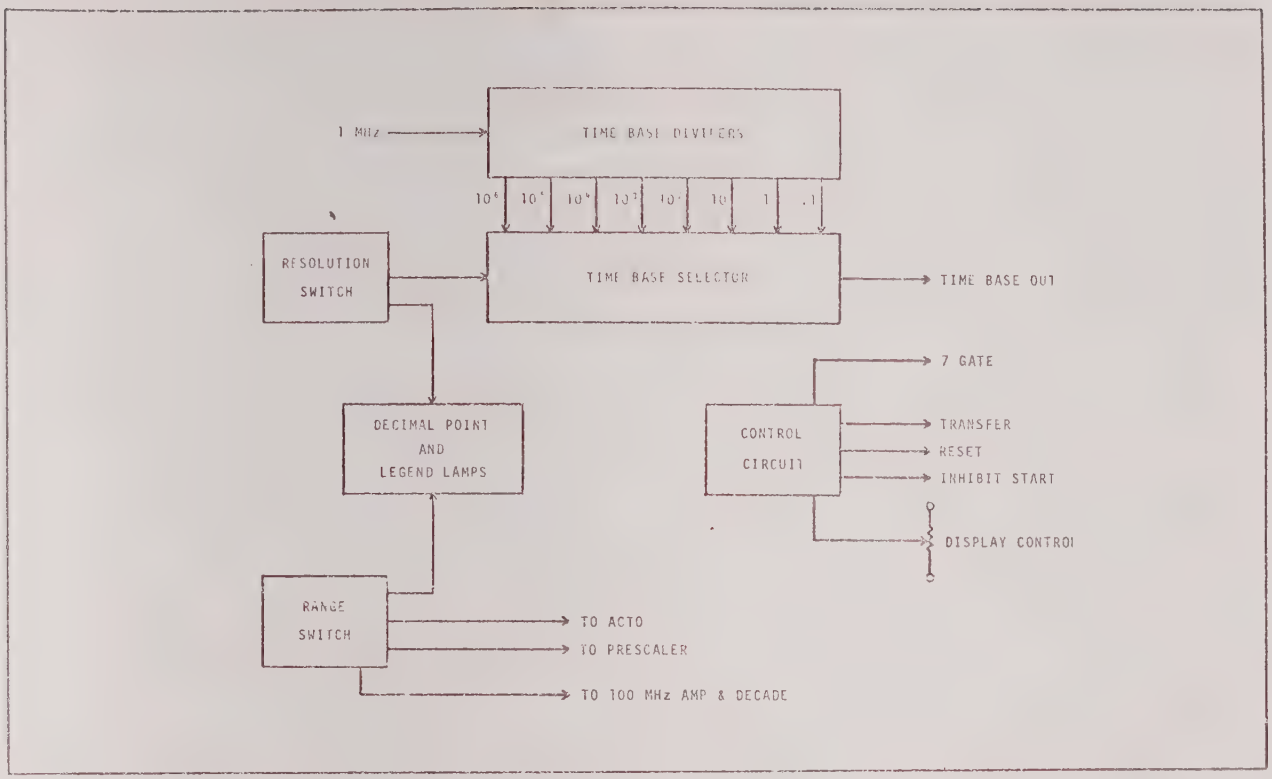


Figure 4-20. Frequency Function Board, Block Diagram

NOTE

This PC assembly is common to several Systron-Donner instruments. Not all of the circuits present are used in this instrument.

The front panel RANGE and RESOLUTION slide switch arms activate magnetic need switches on this assembly. These switches and their associated DTL circuits control the operation of the instrument by providing time base, gating, and control circuit ground paths for the operation of circuits on other assemblies.

Movement of the RANGE switch slide arm controls switches S10 through S15. Switch closure grounds an IC input circuit, and changes its negative output signal level to positive. In the TEST position, S11 is closed grounding pins 1 and 2 of IC3A. Pin 3 of IC3A then goes positive. This positive signal passes through connector 39 to connector 7 on the 100 MHz Amplifier of Decade assembly, here it is applied to the base of Q1 to energize coil C1 and close switch S1. S1 feeds the 1 MHz reference signal in as a test signal. Closure of S12, S13, S14, and S15 provides a ground at connectors 19, 16, 15, or 44 respectively (corresponding IC outputs are not used). These particular ground signals perform a function similar to that described for the TEST position. Closure of any one of these switches causes the corresponding input signal to be channeled into the 100 MHz Amplifier of Decade circuit.

Movement of the RESOLUTION switch slide arm controls switches S1 through S9. Closure of one of these switches places

a ground on three IC input circuits. One of these circuits controls the operation of an annunciator legend light, the second controls operation of one of the display tube decimal point indications, and the third selects the proper time base frequency. As an example, setting the RESOLUTION slide to "1" closes S2. S2 closed places a ground on pin 2 of IC6A, pin 13 of IC6D, and pins 12 and 13 of IC1D. Grounding either input to IC6A energizes the decimal point indicator in display tube V3 to produce a reading of 000000.000. Grounding either input of IC6D energizes annunciator lamp I5 through Q5 to illuminate the "kHz" legend. Grounding the inputs of IC1D places a position signal on pin 2 of IC8A, enabling the 1 count/second output from IC19 to pass through to IC6B and the rear panel T.B. OUT connector, and to terminal 1.

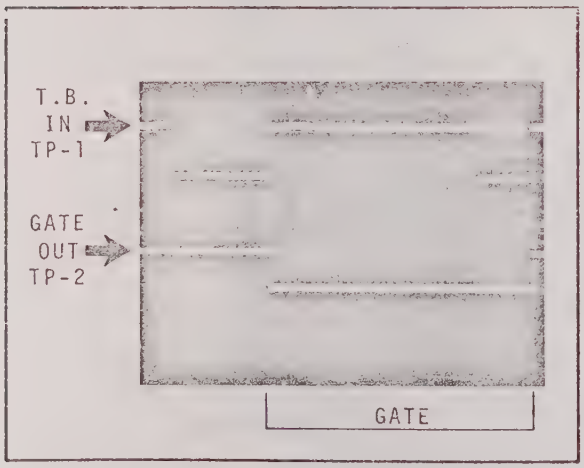


Figure 4-21.
Frequency Function Board, Wave Forms

The time base pulse train at terminal 1 is channeled through the ACTO circuits and back through terminal 2 (TP1) to Count Gate control IC21 and IC22 where it is applied to these two J-K Flip-Flops as a clock pulse train. IC21 output pin 8 goes negative and IC22 output pin 8 goes positive with the end of the first pulse of the count train. This condition enables the count gate at terminal 38, (TP2) through IC11C, and the front panel GATE lamp through IC13D, IC13B, and transistor Q4 to terminal 5. The output of IC13D is also coupled through capacitor C11 to IC10A and IC10B. This circuit functions to ensure that the GATE lamp will remain long enough to be visible, regardless of how short the gate itself may be.

At the end of the second pulse in the count train the condition of IC21/IC22 reverses. This ends the count gate through IC11C, deenergizes the GATE lamp through IC13D/IC13B and Q4 (unless the GATE Light one-shot keeps it on for a short time), produces the End-of-Count gate through IC13A/Q3 to terminal 6, triggers the reset pulse through Q1, and the transfer pulse through pin 2 of IC12A. The reset pulse at TP5 is delayed by the Q2 circuit and occurs after the transfer pulse at TP6. This delayed pulse is also coupled to the time base inhibit one shot circuit IC9A/IC9D. The leading edge of the resultant time base inhibit pulse (TP3) clears the count gate control IC's, IC21/IC22, and through IC9B inhibits the last three decades of the time base chain. By inhibiting these decades, the count sequence is assured of control on the first clock pulse in the 10, 1 and .01 RESOLUTION ranges. Reset pulse delay time is controlled by the front panel RECYCLE RATE control through terminal 8 and R37 to Q2. A reset pulse can be generated at any time by grounding terminal 11 using the front panel manual RESET push-button. Manual reset signals produce the same control pulses as the automatic sequence.

This circuit accepts signals from the 1 MHz reference oscillator, the 100 MHz

A & B Amplifier, and the 300 MHz Prescaler. These three inputs are applied to magnetic reed switches S1, S2, and S3 respectively, whose operation is controlled by the RANGE switch. The selected input signal is coupled through R4 to input amplifier Q1/Q2 (waveform 1). The output of this amplifier is applied to Schmitt trigger circuit Q3/Q4 and shaper Q5. The shaped pulse output of Q5 (waeeform 3), is coupled to the collector of gate transistor Q6 and tunnel diode CR2. When the count gate (from the frequence Function circuit) is not present, Q6 is turned on shunting CR2 and preventing the input signal from reaching Q7. When the count gate enables CR2 (turns Q6 off), CR2, Q7, and Q8 further shape the signal (waveform 4), and apply it to the high speed "2" binary Q10/Q11 through R34. The output of this binary (waveform 5), equal to one half of the input signal frequence, is coupled through amplifier Q13 to gate inverter IC1, and the quinary stages IC2-4. The 1-2-4-8 decade output of these stages is coupled out to the Count Chain & Readout circuits through level translator IC's 5 through 8. At the end of the count gate, the entire count circuit is reset through Q20/Q16 and Q9.

4.3.5 100 MHz Amplifier and Decade
(Schematic #33825, PC Ass'y #33288)

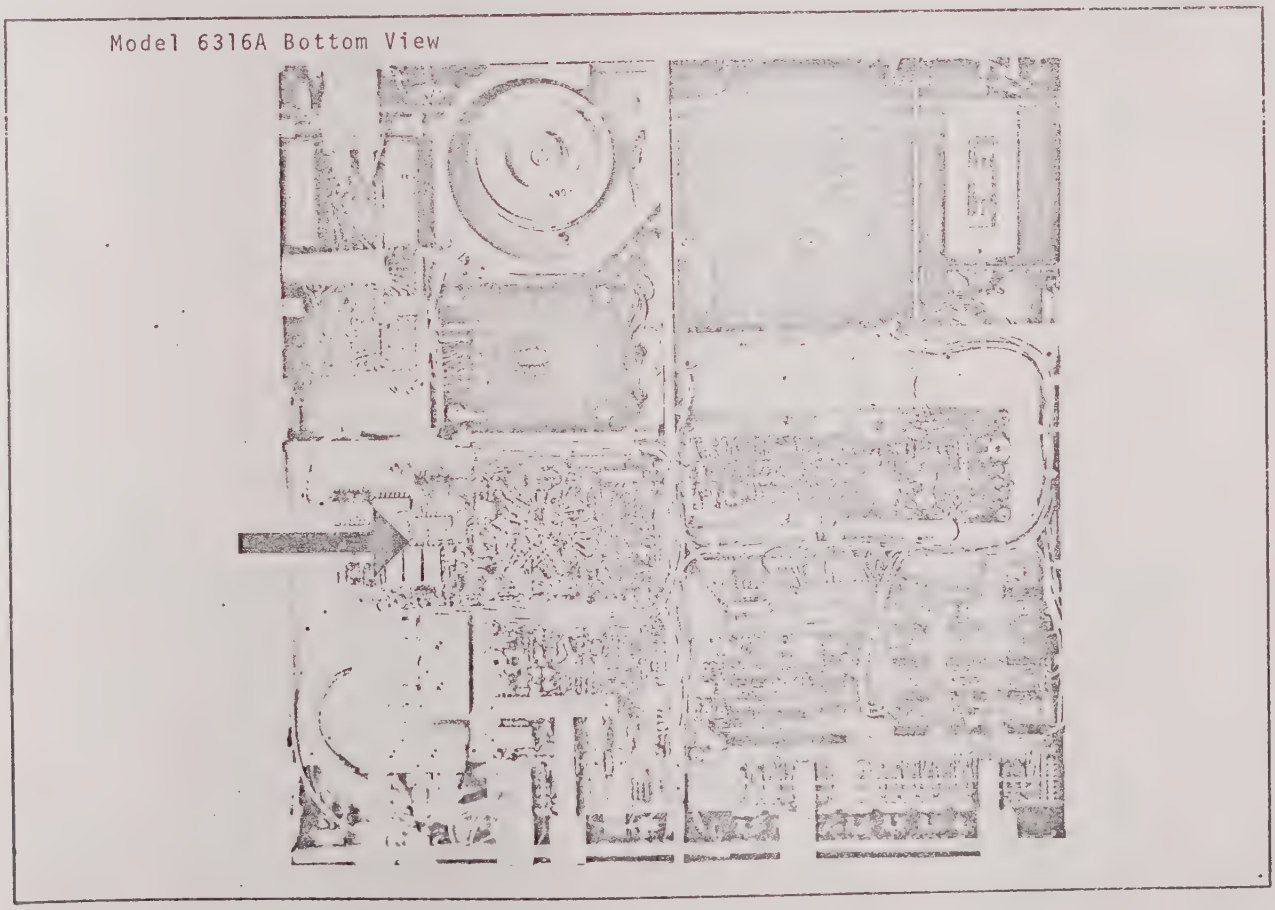


Figure 4-22. 100 MHz Amplifier & Decade, Location

100 MHz Amplifier & Decade

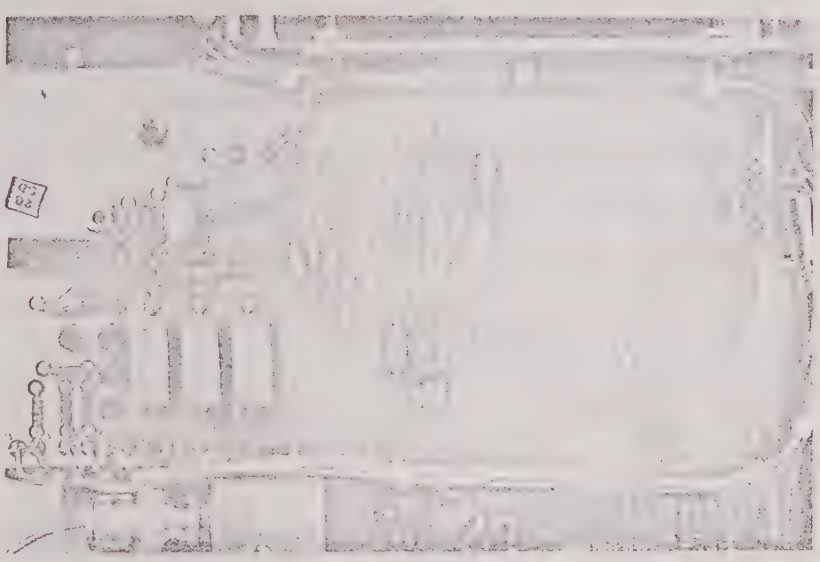

Figure 4-22. 100 MHz Amplifier & Decade, Location (con't.)

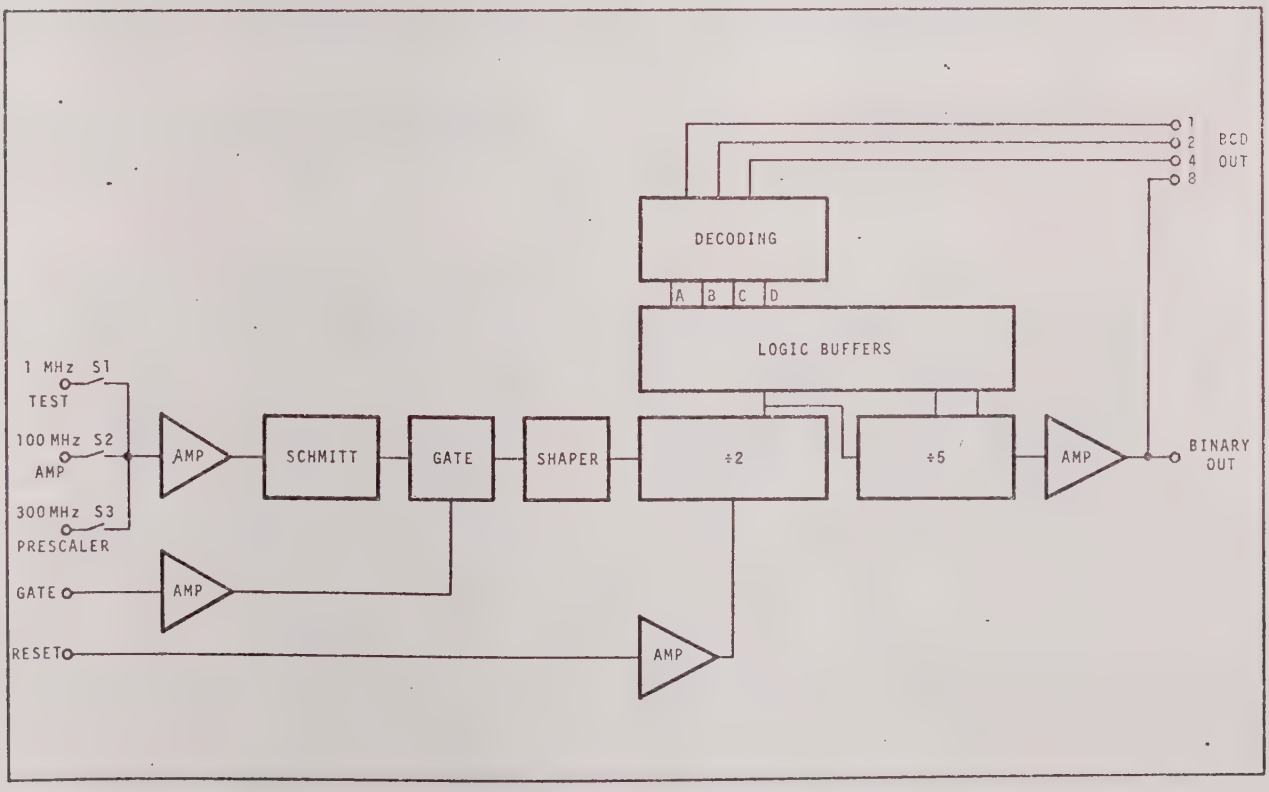


Figure 4-23. 100 MHz Amplifier & Decade, Block Diagram

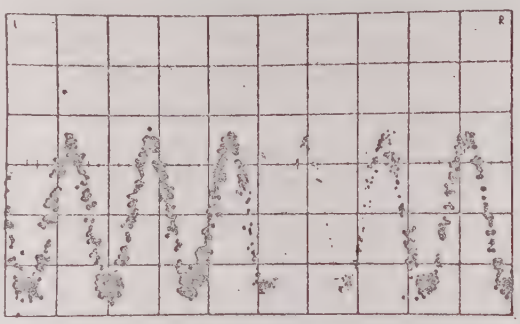

Waveform 1, Amplifier Input (125 MHz, 100 mV rms applied). Monitor R2 and R4 junction. Scope Settings: HORIZ, 5 nsec/cm and VERT, 50 mV/cm. Zero volts dc level.

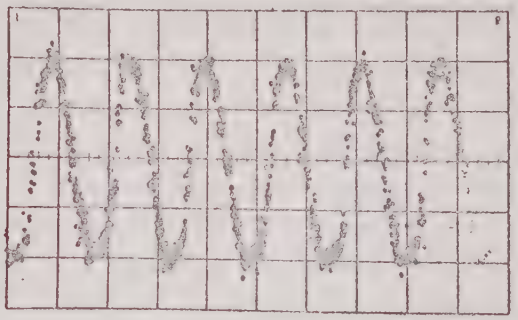

Waveform 2, Amplifier Output. Monitor Q1 collector. Scope Settings: HORIZ, 5 nsec/cm and VERT, 100 mV/cm. AC coupled. 1.55 V dc level.

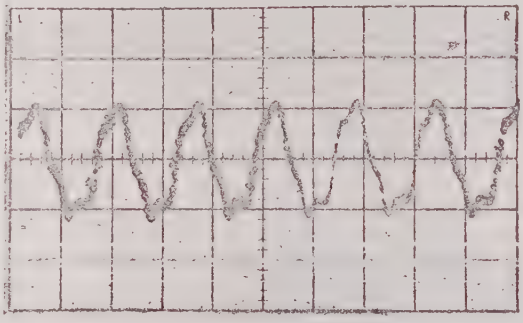

Waveform 3, Schmitt Trigger Output. Monitor Q5 emitter. Scope Settings: HORIZ, 5 nsec/cm and VERT, 200 mV/cm. AC coupled.

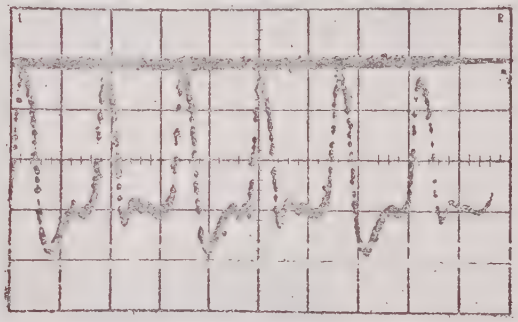

Waveform 4, Pulse Shaper. Monitor Q7 collector. Scope Settings: HORIZ, 5 nsec/cm and VERT, 200 mV/cm. DC coupled. Horizontal line is zero reference.

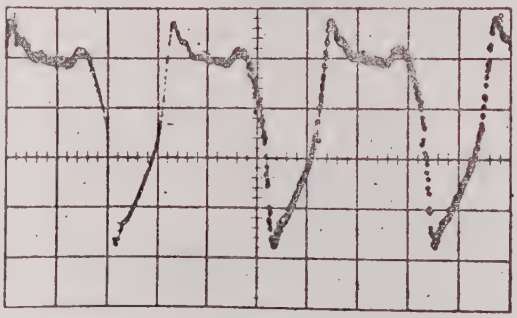

Waveform 5, Binary Output Emitter Follower. Monitor Q18 emitter. Scope Settings: HORIZ, 5 nsec/cm and VERT, 200 mV/cm. AC coupled.

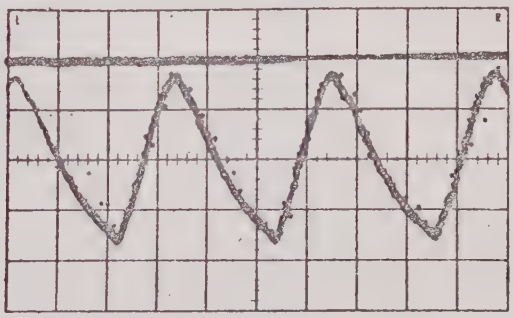

Waveform 6, Binary Buffer. Monitor Q13 collector. Scope Settings: HORIZ, 5 nsec/cm and VERT, 1 V/cm. DC coupled. 0 reference at top.

Figure 4-24. 100 MHz Amplifier & Decade, Wave Forms

This circuit accepts signals from the 1 MHz reference oscillator, the 100 MHz A & B Amplifier, and the 300 MHz Prescaler. These three inputs are applied to magnetic reed switches S1, S2, and S3 respectively, whose operation is controlled by the RANGE switch. The selected input signal is coupled through R4 to input amplifier Q1/Q2 (waveform 1). The output of this amplifier is applied to Schmitt trigger circuit Q3/Q4 and shaper Q5. The shaped pulse output of Q5 (waveform 3), is coupled to the collector of gate transistor Q6 and tunnel diode CR2. When the count gate (from the Frequency Function circuit) is not present, Q6 is turned on shunting CR2 and preventing the input signal from reaching Q7.

When the count gate enables CR2 (turns Q6 off), CR2, Q7, and Q8 further shape the signal (waveform 4), and apply it to the high speed "2" binary Q10/Q11 through R34. The output of this binary (waveform 5), equal to one half of the input signal frequence, is coupled through amplifier Q13 to gate inverter IC1, and the quinary stages IC2-4. The 1-2-4-8 decade output of these stages is coupled out to the Count Chain & Readout circuits through level translator IC's 5 through 8. At the end of the count gate, the entire count circuit is reset through Q20/Q16.

4.3.6 Count Chain and Readout (Schematic #23197, PC Ass'y 19939)

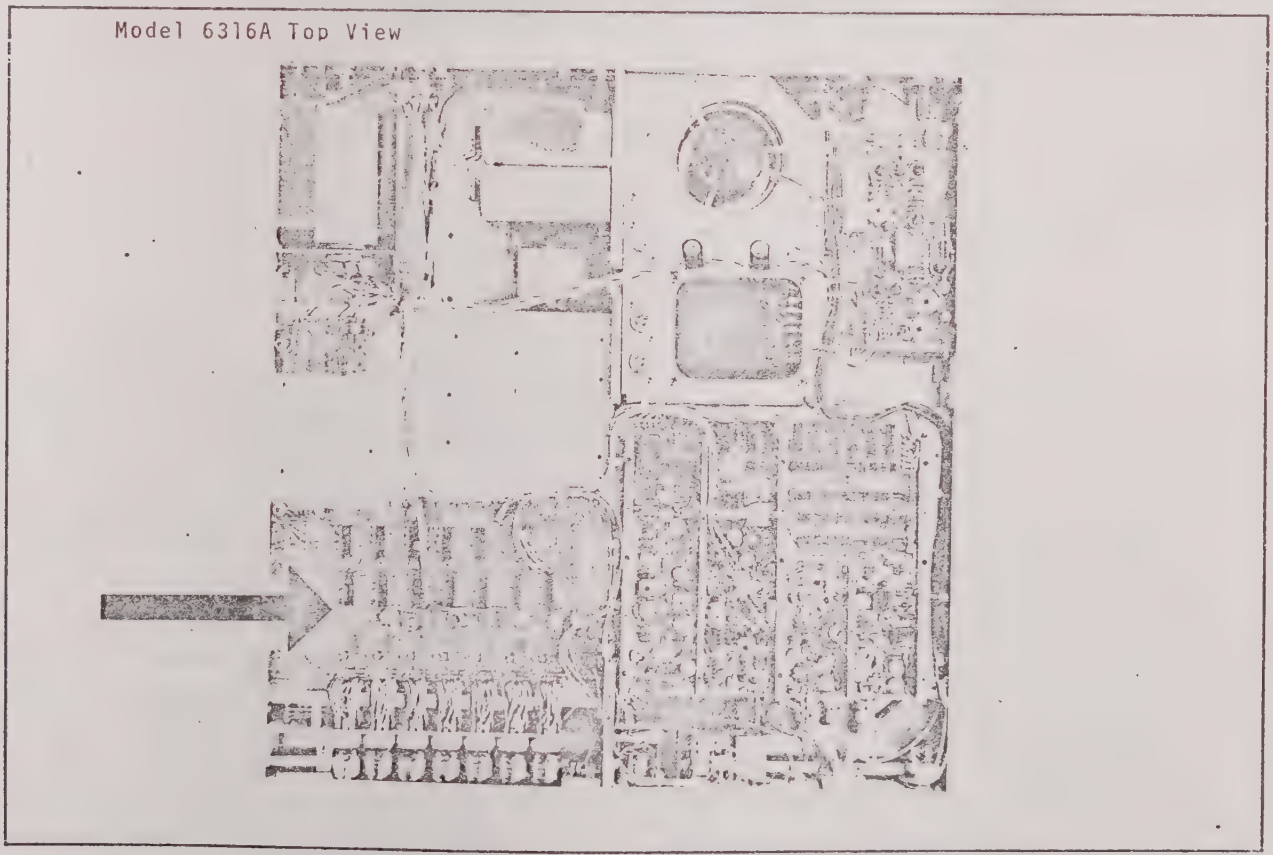


Figure 4-25. Count Chain and Readout, Location

Model 6316A Top View

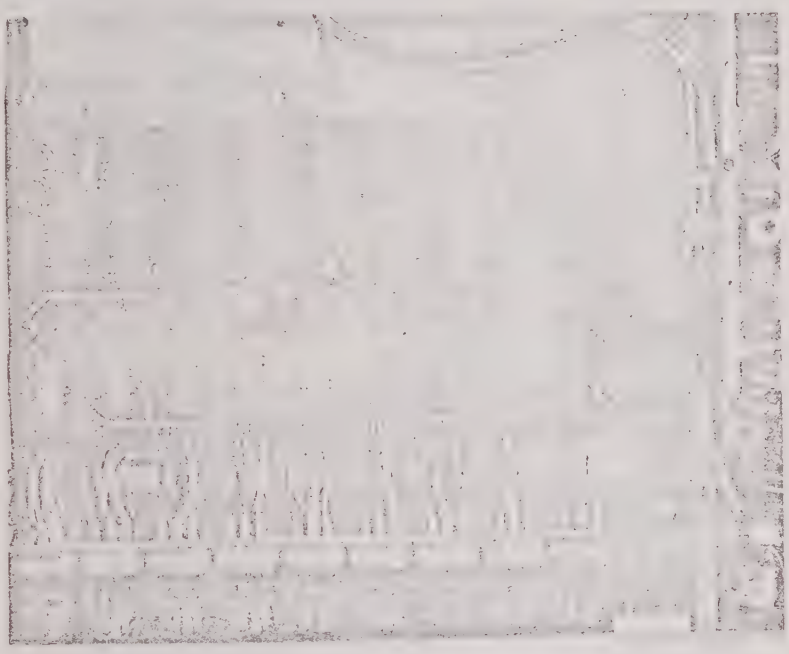

Figure 4-25. Count Chain and Readout, Location (con't.)

This circuit receives the 1-2-4-8 BCD and pulse chain from the 100 MHz Amplifier and Decade circuit. The BCD information is read into the first level count storage chain, consisting of IC's 2,5,6,8,9,11,12,14,15,17,18,20,21,23,24, 26, and 27. At the end of the count gate, the Frequency Function circuit produces a transfer pulse. This transfer pulse is supplied to the count chain IC's pins 4 and 13 through terminal 32. This pulse effects the transfer of the BCD information from the count chain to the second level decoder chain. This transfer empties the count chain in preparation for the next count cycle. The decoder chain, consists of IC's 1,4,7, 10,13,16,19,22, and 25.

Upon entering the decoder the 1-2-4-8 BCD information from the count storage, is immediately available as a 10 wire decimal code to activate the proper cathode in each associated display tube (V1-V9). Decimal point illumination control originates in the Frequency Function circuit and is coupled to the proper display tube decimal driver transistor Q6-Q13.

4.3.7 1 MHz Oscillator-Shaper (Schematic #23111, PC Ass'y #19943)

Model 6316A, Top View

1 MHz Oscillator-Shaper Assembly

Figure 4-26. 1 MHz Oscillator-Shaper, Location

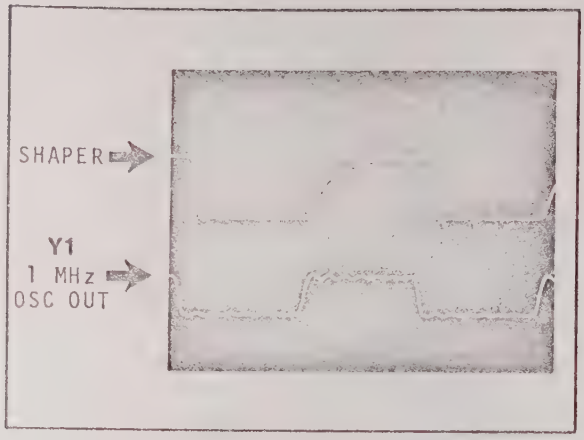


Figure 4-27.
1 MHz Oscillator-Shaper, Waveforms

The basic circuit consists of a plug-in 1 MHz oscillator module Y1, and a 1 MHz shaper circuit. Associated switching circuitry includes the rear panel EXT-INT switch, and the rear panel 1 MHz IN/OUT connector.

The square wave output of the oscillator Y1 (Figure 4-27 Upper Trace) is connected to one side of EXT-INT switch S8. The 1 MHz IN/OUT connector J4 is connected to the arm of S8, and to the input of the shaper circuit. In the INT position of S8, the 1 MHz output of Y1 is connected directly to the shaper circuit, and is also available as an output at J4. In the EXT position S8 disconnects Y1, leaving only the circuit to J4 connected. In this condition, an external frequence standard oscillator may be connected to J4 to provide the instrument's reference frequence.

The shaper circuit shapes the oscillator square wave for use throughout the instrument. It consists of two amplifier stages Q1 and Q2, and the shaper stage Q3. Its output is essentially as represented by the lower trace in Figure 4-26.

The specifications for this standard oscillator are included under instrument specifications in Chapter 1, Section 3.4. Data on optional high performance oscillators will be found in Chapter 7.

4.3.8 Power Supply (Schematic #19735, PC Ass'y #19938)

Model 6316A, Top View

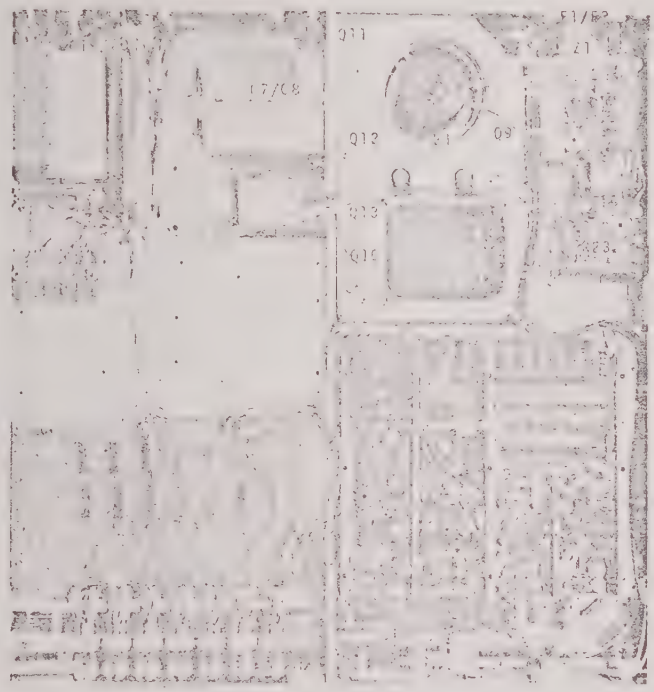


Power Supply

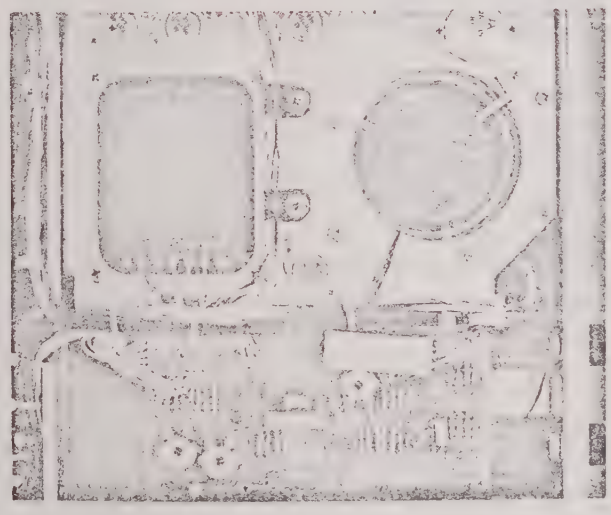

Figure 4-28. Power Supply, Location

The Power Supply circuit provides for control of the instrument's primary ac power, and supplies the voltages needed to operate all other circuits within the instrument.

The primary power circuit consists of line filter Z1, fuses F1 and F2, front panel POWER switch S1, rear panel Lane SELECTOR switch S6, and cooling fan motor B1. S6 provides switching of the primary circuits to operate from either 115V or 230V ac sources. Tie points x/x' and y/y' are utilized to provide controlled ac power for such functions as oscillator over heat. Tie points z/z' are used for connecting optional oven heat circuits for critical high stability oscillators whose ovens must remain on at all times, even though instrument power is turned off. Fan motor B1 runs and 115 vac power is applied to the primary windings of transformer T1 as long as POWER switch S1 is closed.

The +5 volt circuit consists of T1 windings 11-12-13, rectifier diodes CR19/20, filter capacitors C7/8, current regulators Q11/12, and regulation amplifier circuit Q7 and Q8. This circuit supplies +5 volts at 2 amperes with less than 100 mV ripple. It may be monitored at TP3 (orange) on the pc assembly, and its output adjusted using potentiometer R15.

The +15 volt circuit consists of T1 windings 9-6-10, bridge rectifier CR5/6/7/8, capacitor C2, current regulator Q9, and regulation amplifier circuit Q1/2/3. This circuit supplies +15 volts at 200 ma with 13ss than 100 mV ripple. It may be monitored at TP2 (red) on the pc assembly, and its output adjusted using potentiometer R7.

The -15 volt circuit utilizes the same T1 winding and bridge rectifier as the +15 volt supply, along with current regulator Q10, capacitor C3, and regulation amplifier Q4/5/6. This circuit supplies -15 volts at 150 ma with less than 100 mV ripple. It may be monitored at TP1 (brown) on the pc assembly, and its output adjusted using potentiometer R23.

The -5 volt circuit uses the output of the -15 volt supply through amplifier Q13 controlled by zener diode CR18. The circuit supplies -5 volts at 50 ma with less than 100 mV ripple. Its output is controlled by the operation of the -15 volt supply.

The +225 volt supply consists of T1 winding 7-8, bridge rectifier CR1/2/3/4, load resistor R26, and filter capacitor C1. This circuit supplied +225 volts at 30 ma with less than 200 mV ripple.

All components are mounted on the pc assembly except the power transistors, power transformer, rectifier diodes CR19/20, capacitors C7 and C8, the various switches, and the fuses and line filter. The location of these few components is indicated in Figure 4-27.

# CHAPTER 5

# MAINTENANCE AND REPAIR

## 5.1 INTRODUCTION

This chapter contains procedures for aligning and calibrating the instrument. It also contains a troubleshooting and repair section to aid your in maintaining the instrument in proper operating condition. The inclusion of this information, however, in no way abridges or modifies the terms and conditions of the equipment warranty as stated in the front of this manual.

The Model 6316A Frequency Meter makes use of circuits which require a fully equipped maintenance facility for proper service. Field repair of these circuits is not recommended, and a notation to this effect is included where necessary.

## 5.2 FACTORY SERVICE

Systron-Donner Corporation maintains a Service Department equipped and staffed for complete and economical service on all Systron-Donner instruments. Use of this service beyond the warranty period is recommended, to keep your instrument in "like new" condition. Please include the complete model and serial number in all correspondance regarding this instrument. Direct all inquiries, requests for service, etc. to: your nearest Sales/Service Representative, or:

Service Manager
Measurement Products Division
Systron-Donner Corporation
888 Galindo Street
Concord, California 94520
Telephone 415/682-6161
TWX 415/687-3200
Cable SYSTRONDONNER

## 5.3 TEST EQUIPMENT

The following table lists the minimum test equipment inventory capable of supporting the maintenance of the Model 6316A Frequency Meter. In the event these specific items are not available, units of equal or greater accuracy or capability may be used.

Table 5-1

| Item | Name | Model |
|---|---|---|
| 1 | Digital Voltmeter | S-D 9000 |
| 2 | 100 MHz Oscilloscope | Tektronix Model 851 |
| 3 | Dual Trace Plug-In | Tektronix Model 82 |
| 4 | Signal Generator 10-480 MHz | Hewlett-Packard Model 608C |
| 5 | Signal Generator 10 GHz - 15.5 GHz | Hewlett-Packard Model 626A |
| 6 | Signal Generator 10 Hz - 10 MHz | Hewlett-Packard Model 651B |

Standard Electronic tools and supplies suitable for solid state equipment maintenance.

## 5.4 CALIBRATION AND TEST PROCEDURES

Refer to related schematics and assembly drawings in Chapter 6 for aid in making the following tests:

5.4.1 AC and Power Supply (Use Item #1)

a) Disconnect the instrument from the power source and remove covers.

b) Turn front panel POWER switch to ON position.

c) Make the following resistance measurements.

Line to line of power cord 8Ω ±2Ω
Each line to chassis ground 15 MΩ -0Ω +"∞"Ω.
+225V buss to chassis ground 180 kΩ -0Ω +100 kΩ
+15V buss to chassis ground 500Ω -0Ω +1000Ω
-15V buss to chassis ground 400Ω -0Ω +500Ω
+5V buss to chassis ground 80Ω -0Ω +100Ω
-5V buss to chassis ground 180Ω -0Ω +200Ω

d) Connect the instrument to 117V rms ±3V rms 60 Hz power source.

WARNING

With the instrument covers removed and power on, power circuits are exposed which carry potentials considered dangerous to life.

e) Make the following voltage measurements and adjustments in the order given:

+15V (TP2) adjust to within ±0.1V
-15V (TP1) adjust to within ±0.1V
+5V (TP3) adjust to within ±0.5V
-5V (Terminal 6) no adjustment: should be within -0 +0.2V
+225 (+225V terminal) no adjustment: should be within 240V ±10V

f) Observe the supply busses for ripple (Use Item #2 & #3)

+5V (TP3) 120 Hz ripple less than 50 mV p-p
+15V (TP2) 120 Hz ripple less than 50 mV p-p
-15V (TP1) 120 Hz ripple less than 50 mV p-p
-5V (Terminal 6) 120 Hz ripple less than 50 mV p-p
+225V (+225V terminal) 120 Hz ripple less than 3V p-p

5.4.2 Oscillator and Shaper (Use Item 2 & 3)

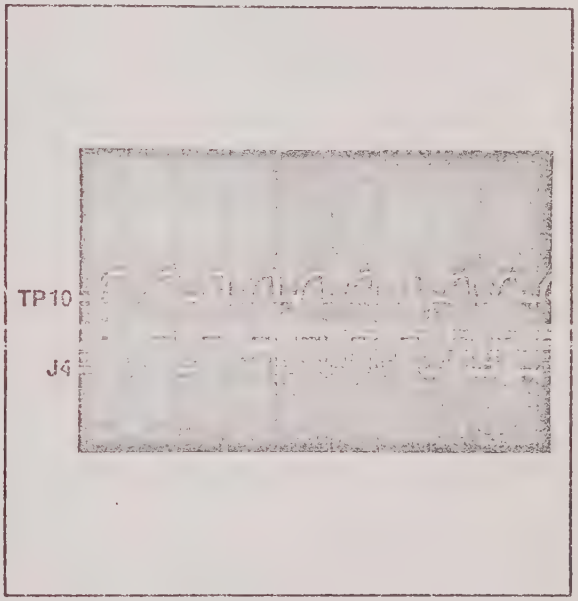


Figure 5-1. Oscillator and Shaper

a) Observe the 1 MHz signal at the 1 MHz INT/EXT connector. Signal amplitude should be 4.0V p-p -0 +0.5V p-p or less, depending on type oscillator.

CAUTION

Transformer slugs are graphite and easily broken.

SYSTRON DONNER CORPORATION

# ADDENDUM

MODEL 6316A

Delete the calibration procedures, Paragraphs 5.4.3 and 5.4.4 of Chapter 5, and add the following:

STEP 5.4.3 100 MHz Input Amplifier - P/N 33262 (p. 4-22) 6-6

A) Place the range switch in the "0-.1 GHz" range and the level control to PRESET. Connect lug 10 to ground.

B) With the Dvm monitor the drains of Q9 and Q12 at R17 and R18 respectively, Adjust R27 for equal voltage (±5 MV) at these points (approximately -6.2V). (NOTE: Step B is a preliminary adjustment only.)

C) Adjust R50 for zero volts at lug 9 (±5 MV). Remove the ground from lug 10 and adjust R27 for zero volts (±5 MV) at lug 9.

D) Check the drains of Q9 and Q12 to make sure that they are still equal. If not, repeat alignment procedure. (NOTE: R34 and associated circuitry are not used in the 6316.)

STEP 5.4.4 100 MHz Amplifier and Decade - P/N 33288

A) With range switch in "0-.1 GHz" and the level control in PRESET, the voltage at the junction of S1, S2, and S3 should be zero. If not, align the input amplifier.

B) Place the range switch to TEST and adjust R2 for zero volts at S1, S2, S3 junction.

C) Monitor the collector of Q1 with DVM and adjust R5 for +1.5V (±5 MV).

D) Place range switch to "0-.1 GHz" and apply 100 MHz at 100 MV to "0-.1 GHz" input connector. With sampling 0-scope (or 100 MHz 0-scope), observe the junction of S1, S2, S3 for waveform #1.

E) Observe the collector of Q1 for waveform #2.

F) Observe Q5 emitter for waveform #3. (A slight adjustment of R5 may be necessary.)

G) Observe Q7 collector and adjust R23 for waveform #4.

H) Observe Q13 emitter for waveform #5 (Binary should be dividing by two.)

I) Observe Q13 collector for waveform #6. If necessary, adjust the value of R53 so that the positive peak is within 400 MV of ground. Recheck step G if R53 is changed.

Modify the following sections on Pages 5-4 and 5-5 to Read:

to the .1-.3 GHz input connector and set for 310 MHz at 150 mV rms. On the 300 MHz Prescaler board:

✓ Turn R21 to midrange, and R59 fully ccw.

✓ Return R59 slowly cw until instrument reads correctly.

✓ Reduce amplitude of generator signal gradually while adjusting R21 for maximum signal.

✓ Tune the signal generator over the full .1 to .3 GHz ranges with signal level at greater than 1V rms. If readings are erratic, readjust R59 ccw to correct.

Readings should be correct over the full range at signal levels between 100 mV and 2V.

5.4.6 .3-3 GHz and 3-12.4 GHz ACTO Ranges (Remove ACTO assembly cover, reinstall center cover screw). N Computer Test

a) Place RANGE switch in TEST position and the RESOLUTION switch in the 1k position. Remove the green wire from Terminal 13 and ground TP1 on the ACTO assembly. Verify a readout of 000.257000 GHz.

b) Ground TP4 (on 6316 only, also ground Terminals 15 & 16). Jumper the +5V buss line to TP6. Place RESOLUTION switch to 100k. Place RANGE switch to "Test". With scope, check IC1-12 for inverse signal seen at Terminal 14.

c) IC1 thru IC8 are J-K flop-flops which divide by two. Check Pin 8 of IC1 thru IC8 for 1/2 frequency seen at previous stage. (Signals should be 0 to +4V). Any discrepancies will be caused by the flip-flop or its associated gates

d) Connect the oscilloscope (Items #2 & 3) to TP3 on the ACTO assembly. Verify a positive 4 msec gate occurs once every counter recycle.

e) Replace the wire on Terminal 13. Verify normal counter operation, 1 MHz Amplifier Adjustment.

f) Connect the oscilloscope (Items 2 & 3) to the collector of Q9 (of junction of C135/L31). Adjust C58 for maximum amplitude of the 1 MHz signal. (4V p-p).

g) Check for presence of the 1 MHz signal at the collectors of Q7 (2-3V p-p) and Q8 (3-4V p-p).

ACTO LOCAL OSCILLATOR ADJUSTMENTS

h) Place the RANGE switch in the 3-12.4 GHz position, and the RESOLUTION switch in the 1M position. Ground TP1 and TP2 on the ACTO assembly.

i) The counter will display the frequency of the high range (3-12.4 GHz) ACTO oscillator, multiplied by 257. Adjust L17 until the counter reads 000024.350 ±.01 GHz.

j) Change the RANGE switch to the .3-3 GHz position, and ground TP1 and TP2 on the ACTO assembly.

k) The counter will display the frequency of the low range (.3-3 GHz) ACTO oscillator, multiplied by 257. Adjust L14 until the counter reads 000007.335 ±.01 GHz.

l) Remove the ground connections to TP1 and TP2. 1 kHz Amplifier and Phase Shift Network.

5-4

m) Connect the oscilloscope (Items 2 & 3) to the collector of Q27. Verify a 1 kHz sinewave 1.75V ±0.25V p-p (If incorrect, change R88 to appropriate value).

n) Connect the oscilloscope external trigger to TP8 on the Frequency Function assembly.

o) Using dual trace, monitor the 1 kHz signals on the positive ends of C93 and C94. Verify approximately equal ac & dc level, and 90° phase difference. Repeat at C92 & C95.

p) Place RANGE switch in the 3-12.4 GHz position connect TP2 to the oscilloscope (Items 2 & 3) horizontal input, and ACTO assembly Terminal 1 to the vertical input (use short ground connection at the probe end). Adjust T9 for maximum amplitude and flatness of trace.

q) Place RANGE switch in the .3-3 GHz position, adjust T8 for maximum amplitude and flatness to trace.

r) Place the RANGE switch in the 3-12.4 GHz position, and the RESOLUTION switch to 1k. Rotate the LEVEL/SENSITIVITY control maximum ccw.

s) Connect a signal generator (Item 5 to the 3-12.4 GHz input and set to 10.0 GHz at -7 dBm (100 mV rms). Connect the oscilloscope vertical input to TP1 on the ACTO assembly, and external trigger to TP8 on the Frequency Function assembly.

t) Slowly rotate the LEVEL/SENSITIVITY control cw until LOK light comes on to indicate that the ACTO has locked on the input signal. Observe "1 kHz x N" signal on the oscilloscope. Adjust C112 for minimum phase modulation.

u) Rotate the LEVEL/SENSITIVITY control ccw. Remove 10 GHz signal generator input and replace with 300 MHz signal from Item 4 signal generator, at -7 dBm (100 mV rms).

v) Turn LEVEL/SENSITIVITY control cw until ACTO locks on to input signal (LOK light on). Observe the "1 kHz x N" signal on the oscilloscope. Adjust C100 for minimum phase modulation.

w) Replace signal generator with Item 5. Tune slowly from 10.0 GHz to 12.4 GHz at -7 dBm. Varify that the ACTO tracks the input correctly.

5.4.7 Remove all test leads and replace ACTO cover. Place the RANGE switch to TEST and the RECYCLE switch to ∞. Push RESET button and observe that the counter recycles.

5-5

nosed pliers or other type of heat sink on the leads of all semiconductor devices and 1/4 watt resistors. Allow the soldered junction to cool before removing the heat sink.

5.5.3 Troubleshooting Procedures

The following information is included as a guide only, and is not intended as a definitive indication of causes of a malfunction.

Table 5-2

| Trouble Indication | Possible Cause |
|---|---|
| 1. No indicators light or all are fuzzy | a. Check Power Supply |
| 2. Erratic readout with no input | a. Rectifier diodes open on PC ass'y. |
| 3. No Auto Recycle | a. Q2 or associated circuitry on Frequency Function ass'y defective. |
| 4. No TIME BASE OUT | a. Check for 1 MHz out rear connection and at TP10 on Frequency Function Assembly.<br>b. Check that each decade ÷10 (IC14-IC20 on Frequency Function Assembly. |
| 5. No Time Base in Prescaler or ACTO ranges. | a. Defective Binary (IC1-IC8) in "N" computer. |
| 6. Double or Fuzzy numbers in one indicator | a. Defective driver. (IC1-IC22) on readout PC Assembly. |
| 7. Low Sensitivity | ACTO Range<br>a. ACTO mixer diodes defective<br>b. Power splitter attenuating input<br>0-.1 GHz Range<br>c. Input amplifier defective<br>.1-.3 Range<br>d. Prescaler out of adjustment |
| 8. Erratic or Random Readout | ACTO Range<br>a. Mixer cable grounds not properly soldered.<br>b. Defective mixer diodes in "N" mixer.<br>c. Loose Allen screws on mixer BNC probes.<br>d. Q28 on ACTO assembly defective.<br>e. 1 MHz Added out of alignment.<br>.1-.3 Range<br>f. Prescaler out of alignment defective.<br>g. Prescaler CR5/6 defective. |
| 9. Incorrect Count | a. Check that 100 MHz A & D Assembly is ÷10.<br>b. Then check that each decade (IC6-IC24 on readout ass'y) ÷10. |

Table 5-2 (con't.)

| Trouble Indication | Possible Cause |
|---|---|
| 10. Frequency "Holes" | a. Mixer or H.G. diode in LOK mixer. |
| 11. ACTO "LOKS" 2 MHz low | a. Decrease value of R27 or C56 on ACTO. |

# CA3011
# CA3012
## Wide-Band Amplifiers

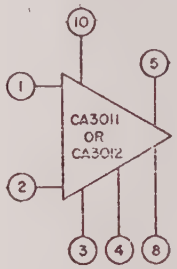


SCHEMATIC DIAGRAM FOR CA3011 AND CA3012

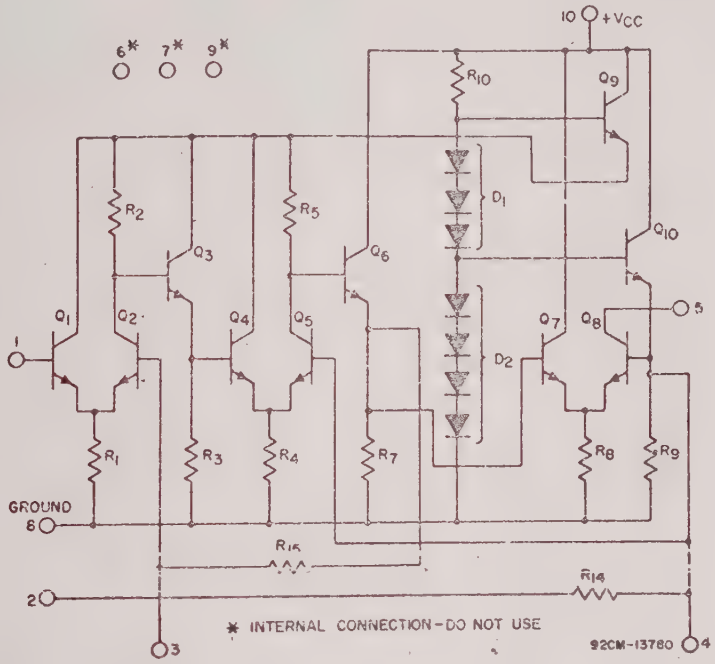


# CA3028A
# CA3028B
## Differential/Cascode Amplifiers

The CA3028A and CA3028B are differential/cascode amplifiers designed for use in communications and industrial equipment operating at frequencies from dc to 120 MHz.

The CA3028B is like the CA3028A but is capable of premium performance particularly in critical dc and differential amplifier applications requiring tight controls for input offset voltage, input offset current, and input bias current.

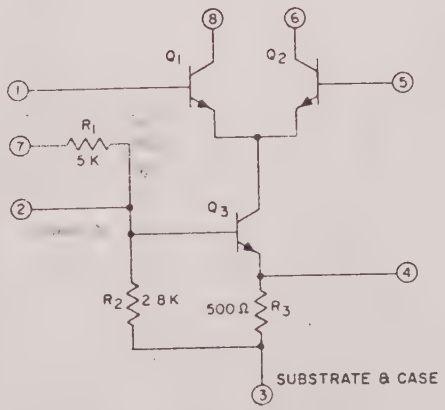


*Schematic diagram for CA3028A*

MECL-TO-SATURATED LOGIC
TRANSLATORS

# MC1018
# MC1218

Level translator intended for converting MECL signal levels to saturated logic levels. The translator will provide the positive logic OR or logic NOR function by connecting the internal bias driver output to the corresponding inputs of the differential amplifier. i.e., when pin 4 is connected to the reference bias, pin 5, pins 6, 10, 11 12, and 13 become the inputs of a 5-input NOR gate. When pin 6 is connected to the reference bias, pin 5, pins 1, 2, 3, and 4 become the inputs of a 4-input OR gate.

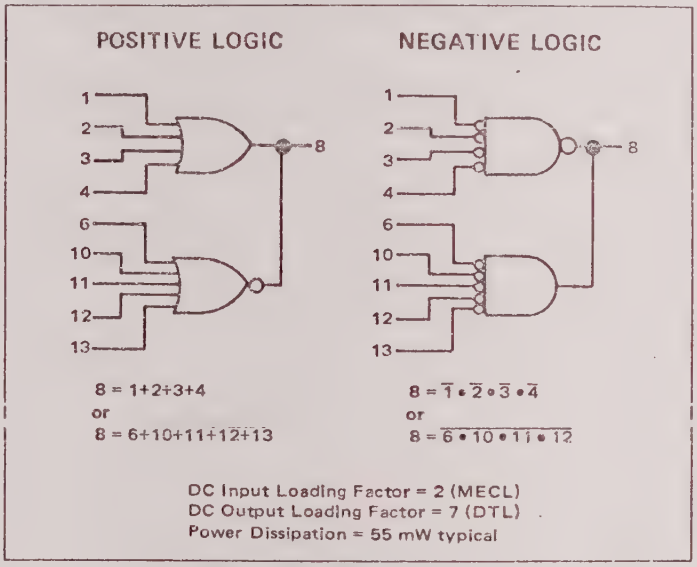


CIRCUIT SCHEMATIC

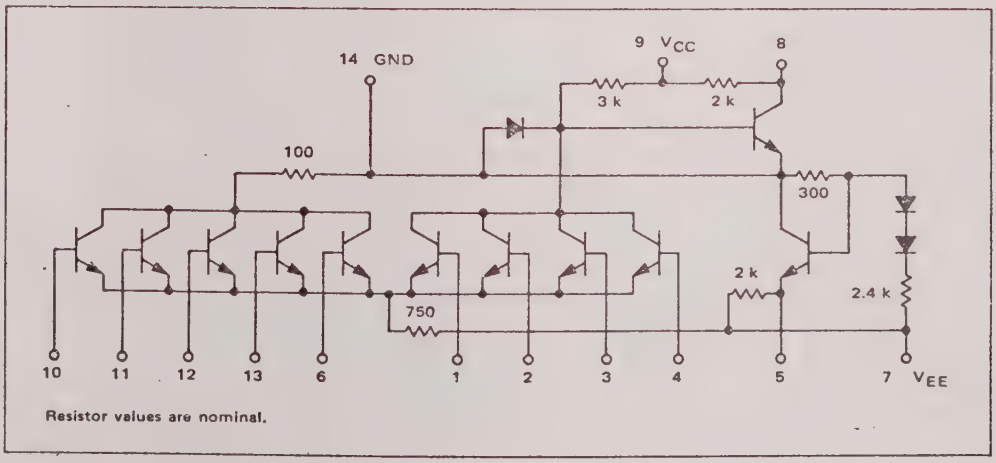


Resistor values are nominal.

DUAL 4-INPUT
CLOCK DRIVER

# MC1023

Provides simultaneous OR/NOR or AND/NAND output functions. It contains an internal bias reference insuring that the threshold point is always in the center of the transition region over the temperature range.

This circuit is designed to operate in high-speed digital computer applications as a clock driver or as a high-speed gate.

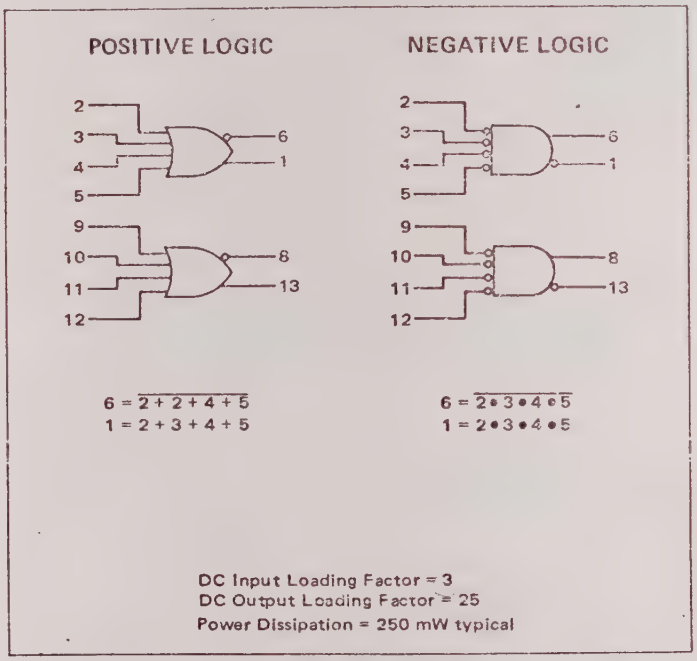


CIRCUIT SCHEMATIC

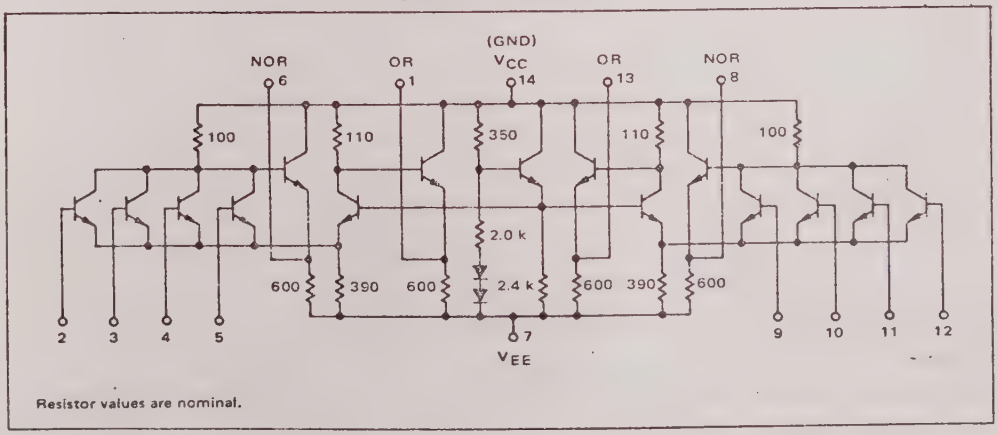

120-MHz AC-COUPLED
J-K FLIP FLOPS

# MC1027

Designed for use at clock frequencies to 100 MHz minimum (120 MHz typical). Logic performing inputs ($\overline{J}$ and $\overline{K}$) are available, as well as dc SET and RESET inputs.

## POSITIVE LOGIC

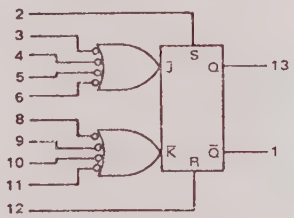


DC Input Loading Factor = 2
DC Output Loading Factor = 25
Power Dissipation = 250 mW typical

•Any $\overline{J}$ or $\overline{K}$ Input, not used for $\overline{C}_D$.
••$\overline{C}_D$ obtained by connecting one $\overline{J}$ and one $\overline{K}$ Input together.

The $\overline{J}$ and $\overline{K}$ inputs refer to logic levels while the $\overline{C}_D$ input refers to dynamic logic swings. The $\overline{J}$ and $\overline{K}$ inputs should be changed to a logical "1" only while the $\overline{C}_D$ input is in a logic "1" state. ($\overline{C}_D$ maximum "1" level = $V_{CC}$ −0.6 V). Clock $\overline{C}_D$ is obtained by tying one $\overline{J}$ and one $\overline{K}$ input together.

## R-S TRUTH TABLE

| Pin No. | R 12 | S 2 | $Q^{n+1}$ 13 |
|---|---|---|---|
| | 0 | 0 | $Q^n$ |
| | 0 | 1 | 1 |
| | 1 | 0 | 0 |
| | 1 | 1 | N.D. |

All $\overline{J}$-$\overline{K}$ Inputs Are Static

## $\overline{J}_D$-$\overline{K}_D$ TRUTH TABLE

| Pin No. | $\overline{J}_D$ • | $\overline{K}_D$ • | $Q^{n+1}$ 13 |
|---|---|---|---|
| | 0 | 0 | $Q^n$ |
| | 0 | 1 | 0 |
| | 1 | 0 | 1 |
| | 1 | 1 | $\overline{Q}^n$ |

All Other $\overline{J}$-$\overline{K}$ Inputs And The R-S Inputs Are At a "0" Level

## CLOCKED $\overline{J}$-$\overline{K}$ TRUTH TABLE

| Pin No. | $\overline{J}$ • | $\overline{K}$ • | $\overline{C}_D$ •• | $Q^n$ 13 |
|---|---|---|---|---|
| | ϕ | ϕ | 0 | $Q^n$ |
| | 0 | 0 | 1 | $\overline{Q}^n$ |
| | 0 | 1 | 1 | 1 |
| | 1 | 0 | 1 | 0 |
| | 1 | 1 | 1 | $Q^n$ |

All Other $\overline{J}$-$\overline{K}$ Inputs And The R-S Inputs Are At a "0" Level

## CIRCUIT SCHEMATIC

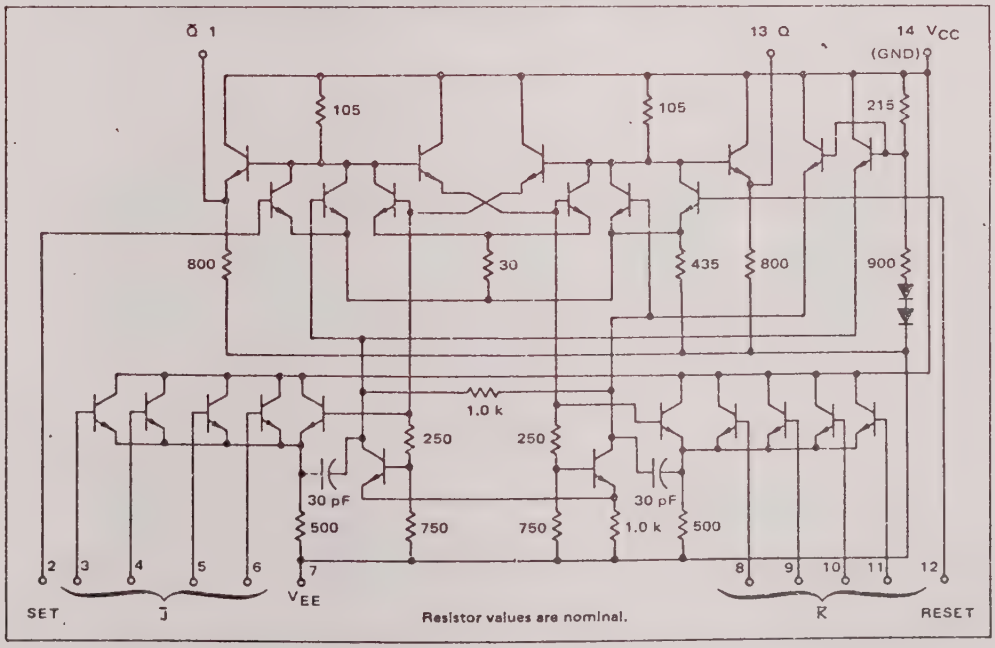


Resistor values are nominal.

## APPLICATIONS INFORMATION

The MC1027 flip-flop is obtained by reducing all resistor values of the MC1013 by a factor of two. The resultant flip-flop is no longer limited by circuit design, but by device speeds. Typically the MC1027 will operate 50% faster than the MC1013. Power dissipation is doubled over that of the MC1013, but circuit operation is the same. The MC1023 clock driver is recommended for driving the MC1027 to its full capability. (The MC1023 high-speed clock driver exhibits propagation delay and rise times of about 2.0 ns when driving five flip-flops.) Maximum operating frequency depends upon layout techniques. Short lead lengths with low impedance lines are recommended. A 100+MHz shift counter is shown in Figure 5.

Operation of the MC1027 is very uniform with negligible variation observed with temperature change from 0°C to +75°C. Propagation delay is nominally 4.5 ns, with rise and fall times varying from 3.5 to 4.0 ns with a load of another flip-flop on the output.

### FIGURE 5 - 100+ MHz "SWITCH-TAIL" RING COUNTER

Shift pattern of five "0"s and five "1"s is assured by logic feedback from the fourth to first stage.

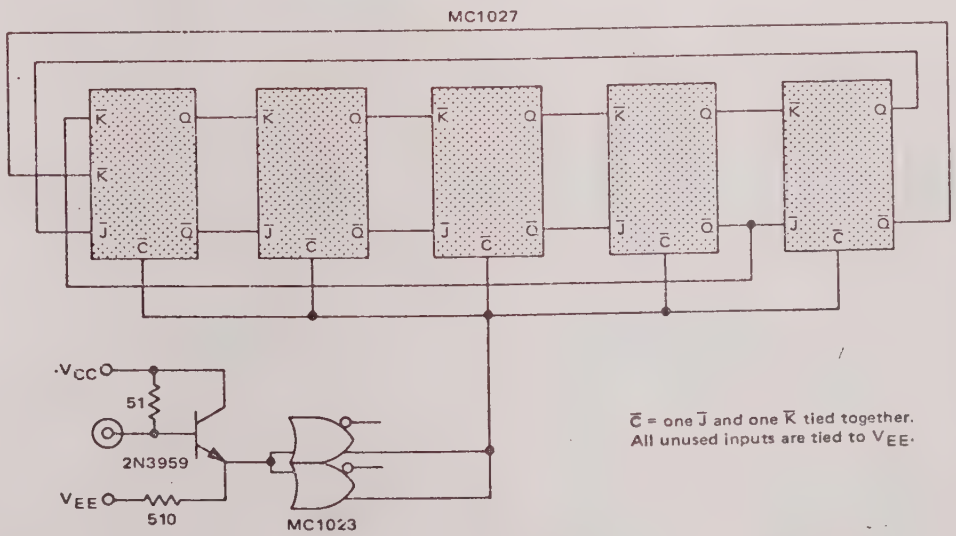

# TYPE SN15 832
## DUAL 4-INPUT NAND/NOR BUFFER

**schematic (each gate)**

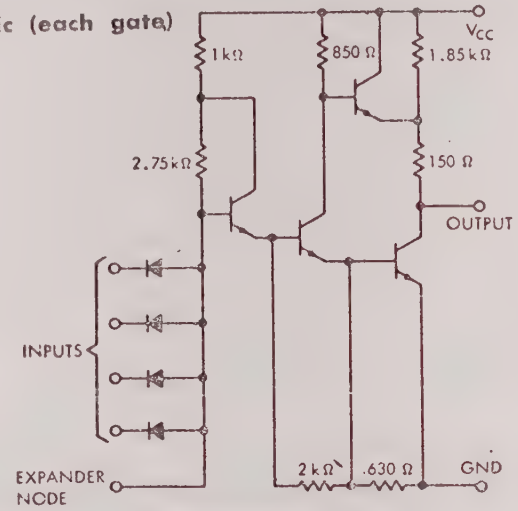


Component values shown are nominal.

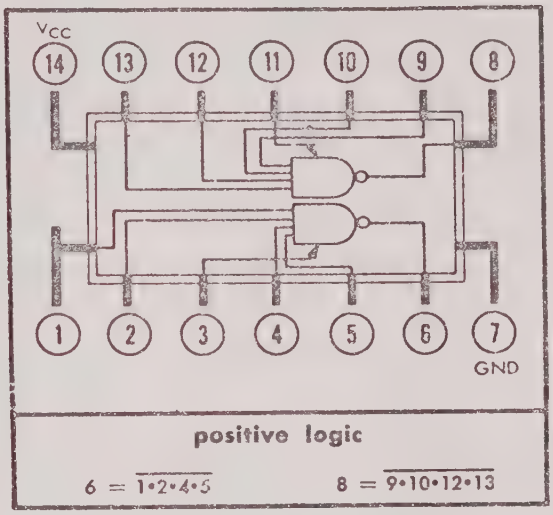


**positive logic**

$6 = \overline{1 \cdot 2 \cdot 4 \cdot 5}$ $\quad 8 = \overline{9 \cdot 10 \cdot 12 \cdot 13}$

# TYPE SN15 846
## QUADRUPLE 2-INPUT NAND/NOR GATE

**schematic (each gate)**

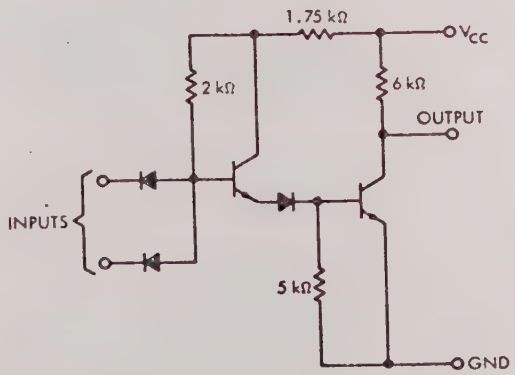


Component values shown are nominal.

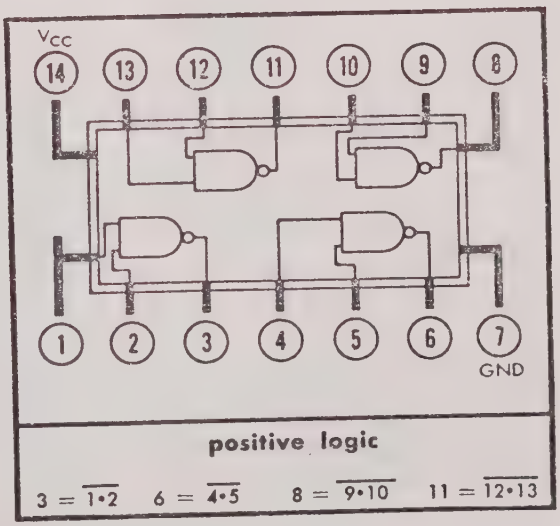


**positive logic**

$3 = \overline{1 \cdot 2}$ $\quad 6 = \overline{4 \cdot 5}$ $\quad 8 = \overline{9 \cdot 10}$ $\quad 11 = \overline{12 \cdot 13}$

# TYPE SN15 962
## TRIPLE 3-INPUT NAND/NOR GATE

schematic (each gate)

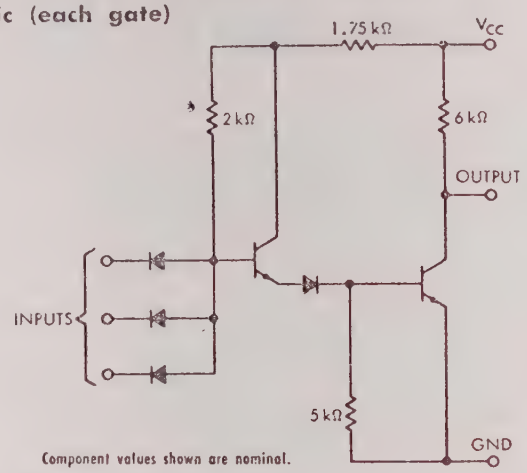


Component values shown are nominal.

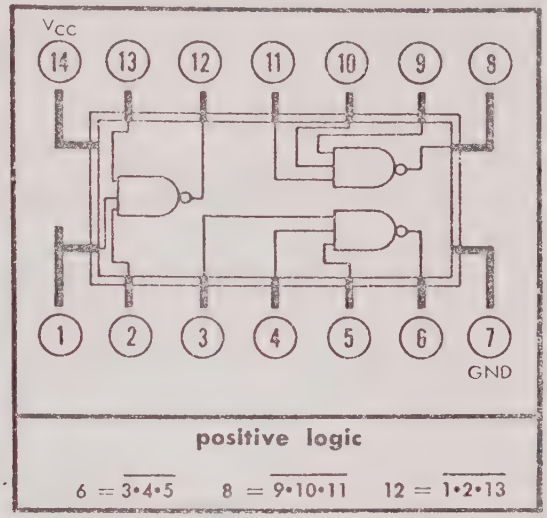


positive logic

$6 = \overline{3 \cdot 4 \cdot 5}$ $8 = \overline{9 \cdot 10 \cdot 11}$ $12 = \overline{1 \cdot 2 \cdot 13}$

# TYPE SN7400
## QUADRUPLE 2-INPUT POSITIVE NAND GATE

schematic (each gate)

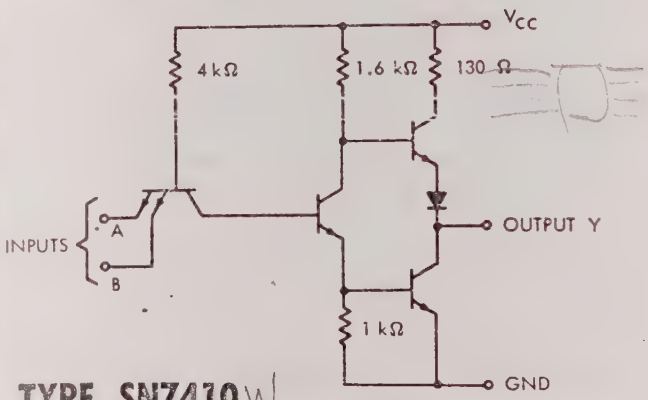


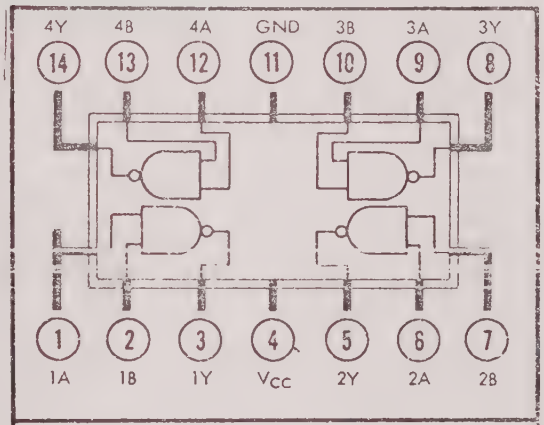


positive logic

$Y = \overline{AB}$

# TYPE SN7410
## TRIPLE 3-INPUT POSITIVE NAND GATE

schematic (each gate)

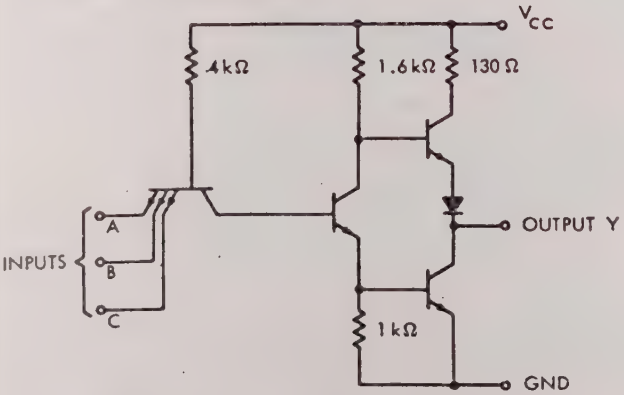


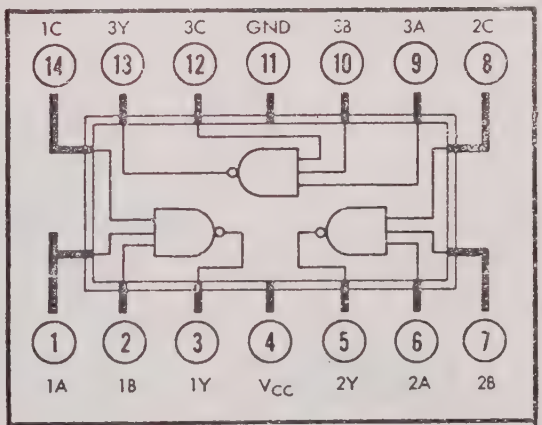


positive logic

$Y = \overline{ABC}$

# CIRCUIT TYPE SN7441A
# BCD-TO-DECIMAL DECODER/DRIVER

## logic

TRUTH TABLE

| INPUT | | | | OUTPUT ON‡ |
|---|---|---|---|---|
| D | C | B | A | |
| 0 | 0 | 0 | 0 | 0 |
| 0 | 0 | 0 | 1 | 1 |
| 0 | 0 | 1 | 0 | 2 |
| 0 | 0 | 1 | 1 | 3 |
| 0 | 1 | 0 | 0 | 4 |
| 0 | 1 | 0 | 1 | 5 |
| 0 | 1 | 1 | 0 | 6 |
| 0 | 1 | 1 | 1 | 7 |
| 1 | 0 | 0 | 0 | 8 |
| 1 | 0 | 0 | 1 | 9 |

‡ All other outputs are off.

J OR N DUAL-IN-LINE PACKAGE
(TOP VIEW)

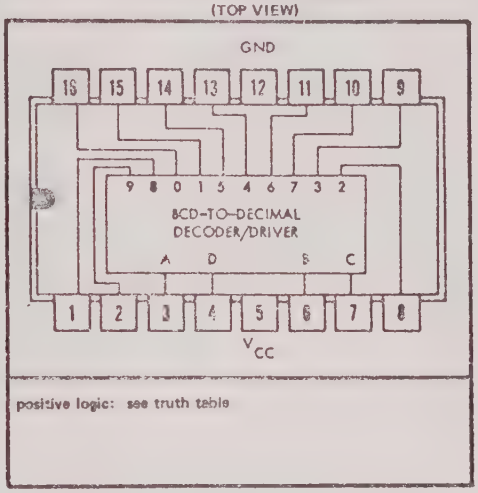


positive logic: see truth table

## description

The SN7441A is a monolithic, BCD-to-decimal decoder incorporating high performance output transistors designed for driving gas-filled, cold-cathode indicator tubes. The BCD-to-decimal decoder consists of familiar transistor-transistor-logic (TTL) gate circuits which select one of the ten decimal output drivers. The BCD inputs are fully compatible with Series 74 logic outputs; and, in addition, physical placement of these inputs is coincidental with the BCD output of the SN7490 decade counter. The ten high-breakdown, n-p-n transistors have a maximum reverse current of 50 μA at 55 V over the operating temperature range.

A typical application shows the SN7441A used as a gas-filled, display-indicator driver.

## typical application data

The SN7441A output transistors are capable of withstanding voltages and sinking current required to operate most types of gas-filled indicator tubes.

Clamping diodes have been incorporated in the outputs of this improved decoder/driver.

When these decoder/drivers are used in close proximity (on the same circuit board) with standard digital integrated circuits, care should be exercised to ensure that the impedance of the ground bus (including interconnections) is sufficiently low to absorb the normal energy levels resulting from switching the tube elements.

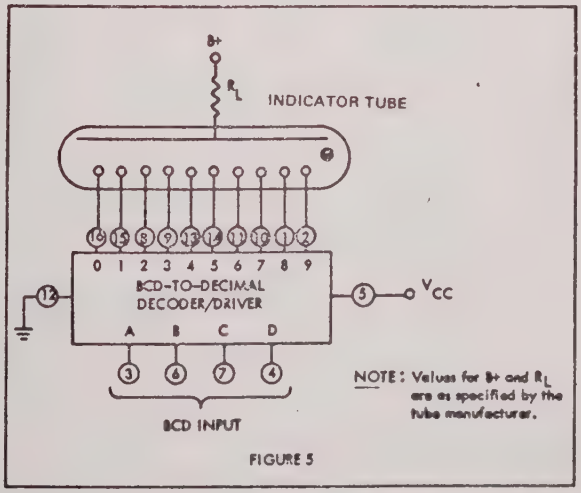


FIGURE 5

# CIRCUIT TYPES SN5470, SN7470
# EDGE-TRIGGERED J-K FLIP-FLOPS

## logic

| TRUTH TABLE | | |
|---|---|---|
| $t_n$ | | $t_{n+1}$ |
| J | K | Q |
| 0 | 0 | $Q_n$ |
| 0 | 1 | 0 |
| 1 | 0 | 1 |
| 1 | 1 | $\overline{Q}_n$ |

NOTES:
1. $J = J1 \cdot J2 \cdot \overline{J^*}$.
2. $K = K1 \cdot K2 \cdot K^*$.
3. $t_n$ = Bit time before clock pulse.
4. $t_{n+1}$ = Bit time after clock pulse.
5. If inputs J* or K* are not used they must be grounded.
6. NC - No Internal Connection

S FLAT PACKAGE
(TOP VIEW)

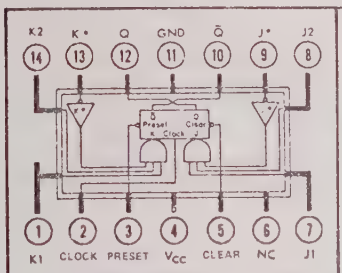


J OR N DUAL-IN-LINE PACKAGE
(TOP VIEW)

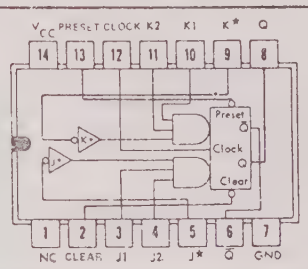


positive logic: Low input to preset sets Q to logical 1
Low input to clear sets Q to logical 0
Preset or clear function can occur only when clock input is low.

## description

These monolithic, edge-triggered J-K flip-flops feature gated inputs, direct clear and preset inputs, and complementary Q and $\overline{Q}$ outputs. Input information is transferred to the outputs on the positive edge of the clock pulse.

Direct-coupled clock triggering occurs at a specific voltage level of the clock pulse, and after the clock input threshold voltage has been passed, the gated inputs are locked out.

These flip-flops are ideally suited for medium- to high-speed applications and can result in a significant saving in system power dissipation and package count where input gating is required.

## schematic

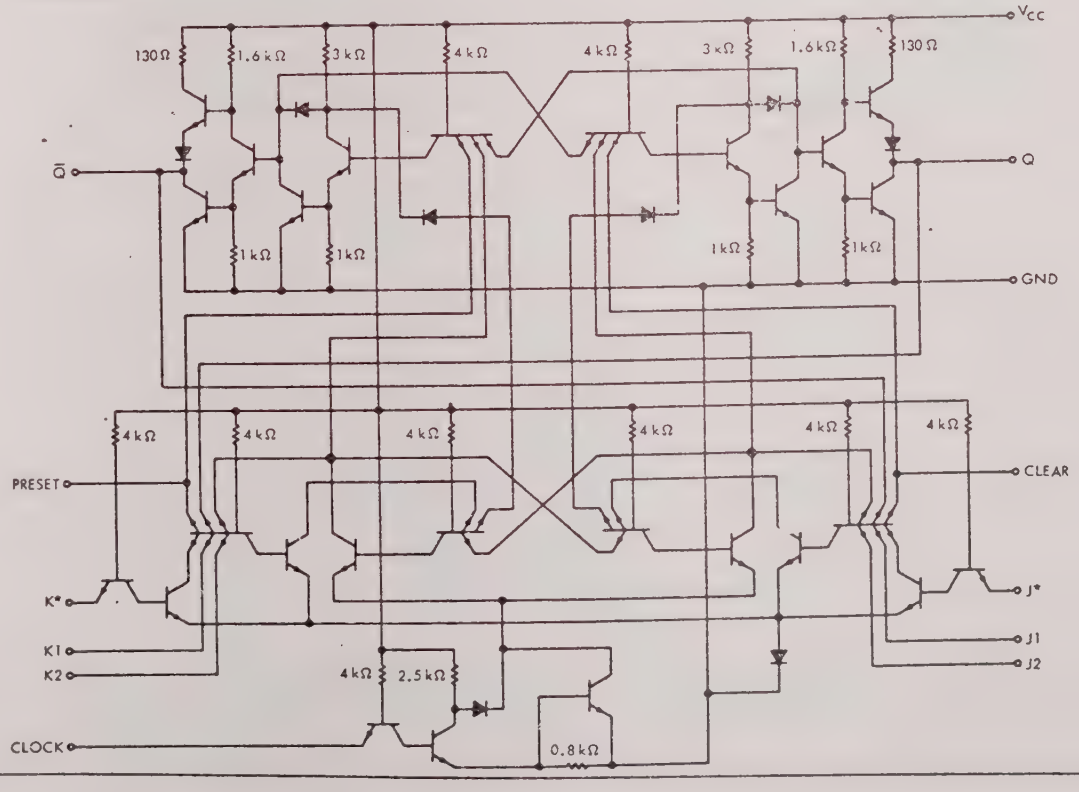

# CIRCUIT TYPES SN5473
# DUAL J-K MASTER-SLAVE FLIP-FLOPS

SN5473, SN7473
S FLAT PACKAGE
(TOP VIEW)

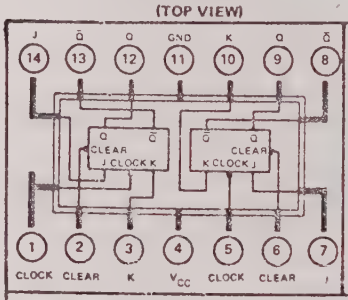


SN5473, SN7473
J OR N DUAL-IN-LINE PACKAGE
(TOP VIEW)

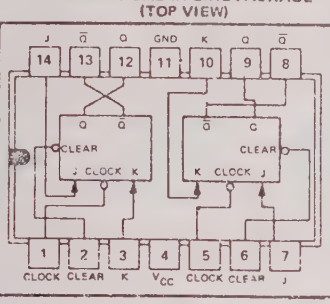


SN54107, SN74107
J OR N DUAL-IN-LINE PACKAGE
(TOP VIEW)

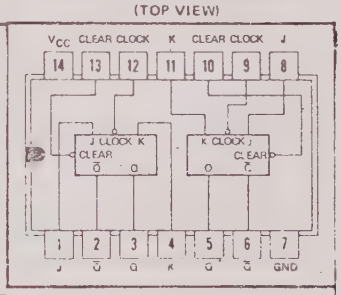


**positive logic:** Low input to clear sets Q to logical 0.
Clear is independent of clock.

## description

These J-K flip-flops are based on the master-slave principle. Inputs to the master section are controlled by the clock pulse. The clock pulse also regulates the state of the coupling transistors which connect the master and slave sections. The sequence of operation is as follows. (See waveform on page 2-26)

1. Isolate slave from master
2. Enter information from J and K inputs to master
3. Disable J and K inputs
4. Transfer information from master to slave.

## logic

**TRUTH TABLE**
(Each Flip-Flop)

| $t_n$ | | $t_{n+1}$ |
|---|---|---|
| J | K | Q |
| 0 | 0 | $Q_n$ |
| 0 | 1 | 0 |
| 1 | 0 | 1 |
| 1 | 1 | $\bar{Q}_n$ |

NOTES: 1. $t_n$ = Bit time before clock pulse.
2. $t_{n+1}$ = Bit time after clock pulse.

## functional block diagram (each flip-flop)

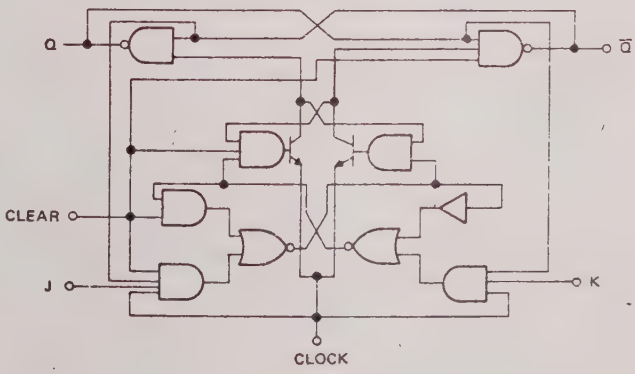

# CIRCUIT TYPES SN5475,
# 4-BIT BISTABLE LATCHES

SN5477/SN7477
S FLAT PACKAGE
(TOP VIEW)

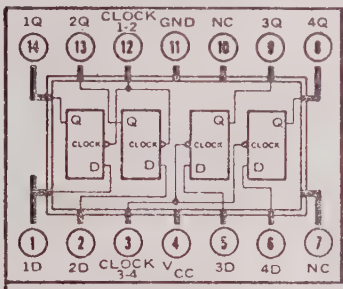


SN5475/SN7475
J OR N DUAL-IN-LINE PACKAGE
(TOP VIEW)

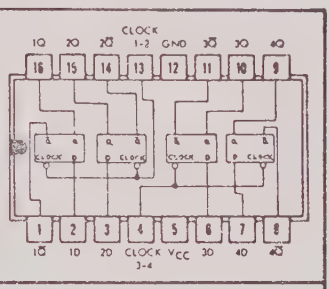


positive logic: see truth table

## logic

| TRUTH TABLE (Each Latch) | |
|---|---|
| $t_n$ | $t_{n+1}$ |
| D | Q |
| 1 | 1 |
| 0 | 0 |

## functional block diagram (each latch)

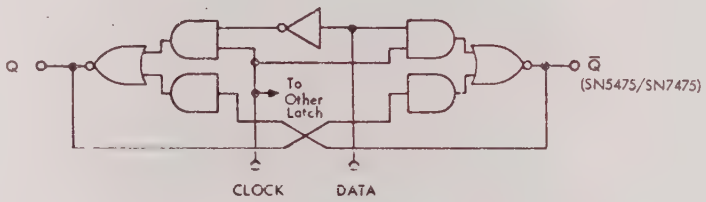


## description

These latches are ideally suited for use as temporary storage for binary information between processing units and input/output or indicator units. Information present at a data (D) input is transferred to the Q output when the clock is high, and the Q output will follow the data input as long as the clock remains high. When the clock goes low, the information (that was present at the data input at the time the transition occurred) is retained at the Q output until the clock is permitted to go high.

## schematic (each latch)

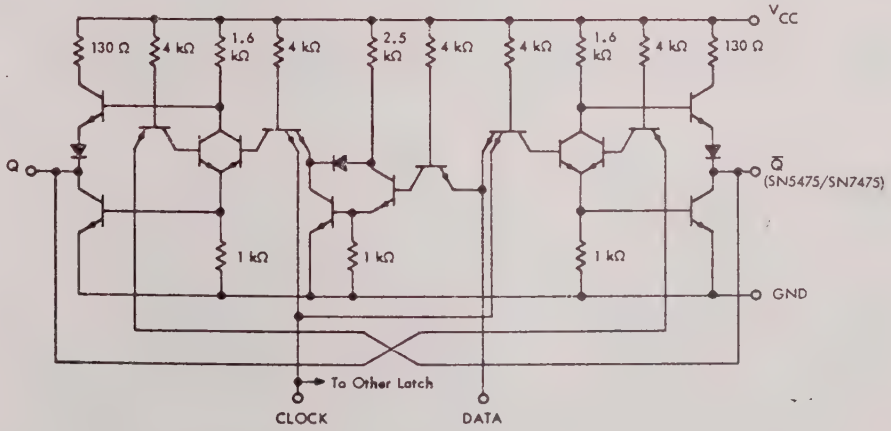

# CIRCUIT TYPES SN5490, SN7490
# DECADE COUNTERS

## TRUTH TABLES

BCD COUNT SEQUENCE
(See Note 1)

| COUNT | OUTPUT | | | |
|---|---|---|---|---|
| | D | C | B | A |
| 0 | 0 | 0 | 0 | 0 |
| 1 | 0 | 0 | 0 | 1 |
| 2 | 0 | 0 | 1 | 0 |
| 3 | 0 | 0 | 1 | 1 |
| 4 | 0 | 1 | 0 | 0 |
| 5 | 0 | 1 | 0 | 1 |
| 6 | 0 | 1 | 1 | 0 |
| 7 | 0 | 1 | 1 | 1 |
| 8 | 1 | 0 | 0 | 0 |
| 9 | 1 | 0 | 0 | 1 |

RESET/COUNT (See Note 2)

| RESET INPUTS | | | | OUTPUT |
|---|---|---|---|---|
| $R_{0(1)}$ | $R_{0(2)}$ | $R_{9(1)}$ | $R_{9(2)}$ | D C B A |
| 1 | 1 | 0 | X | 0 0 0 0 |
| 1 | 1 | X | 0 | 0 0 0 0 |
| X | X | 1 | 1 | 1 0 0 1 |
| X | 0 | X | 0 | COUNT |
| 0 | X | 0 | X | COUNT |
| 0 | X | X | 0 | COUNT |
| X | 0 | 0 | X | COUNT |

NC—No Internal Connection

NOTES: 1. Output A connected to input BD for BCD count.
2. X indicates that either a logical 1 or a logical 0 may be present.

J OR N
DUAL-IN-LINE PACKAGE (TOP VIEW)

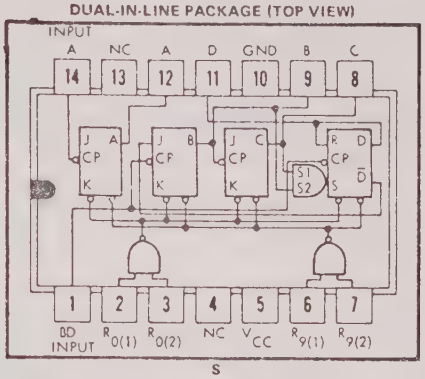


W
FLAT PACKAGE (TOP VIEW)

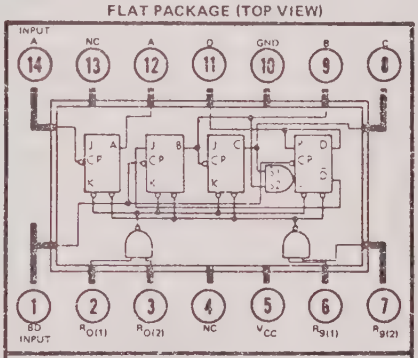


positive logic: see truth table

## description and typical count configurations

These high-speed, monolithic decade counters consist of four dual-rank, master-slave flip-flops internally interconnected to provide a divide-by-two counter and a divide-by-five counter. Gated direct reset lines are provided to inhibit count inputs and return all outputs to logical zero or to a binary coded decimal (BCD) count of 9. As the output from flip-flop A is not internally connected to the succeeding stages, the count may be separated in three independent count modes:

1. When used as a binary coded decimal decade counter, the BD input must be externally connected to the A output. The A input receives the incoming count, and a count sequence is obtained in accordance with the BCD count sequence truth table shown above. In addition to a conventional zero reset, inputs are provided to reset a BCD count for nine's complement decimal applications.

2. If a symmetrical divide-by-ten count is desired for frequency synthesizers or other applications requiring division of a binary count by a power of ten, the D output must be externally connected to the A input. The input count is then applied at the BD input and a divide-by-ten square wave is obtained at output A.

3. For operation as a divide-by-two counter and a divide-by-five counter, no external interconnections are required. Flip-flop A is used as a binary element for the divide-by-two function. The BD input is used to obtain binary divide-by-five operation at the B, C, and D outputs. In this mode, the two counters operate independently; however, all four flip-flops are reset simultaneously.

## schematic

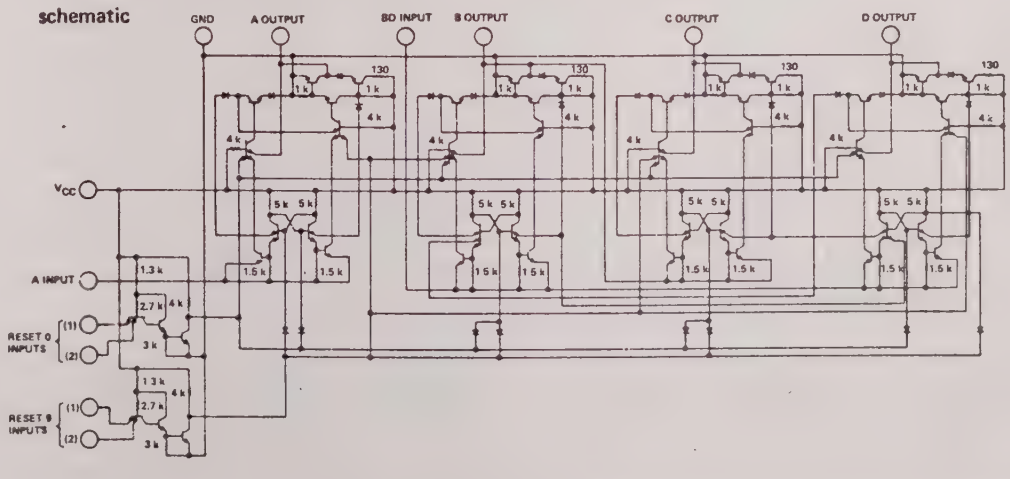

# CHAPTER 6

## DRAWINGS AND PARTS LISTS

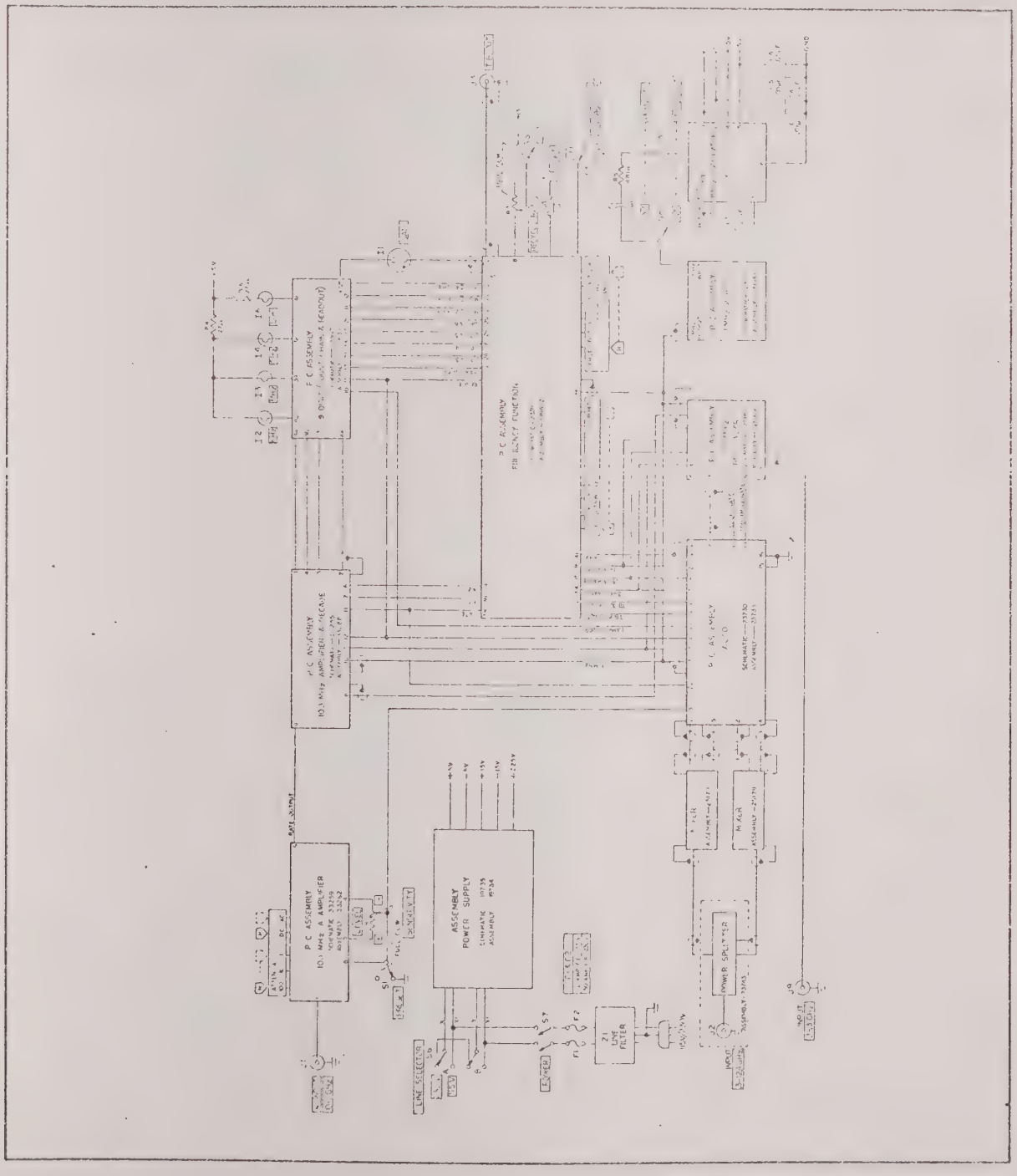


Figure 6-1. Block Diagram Model 6316A [25590D]

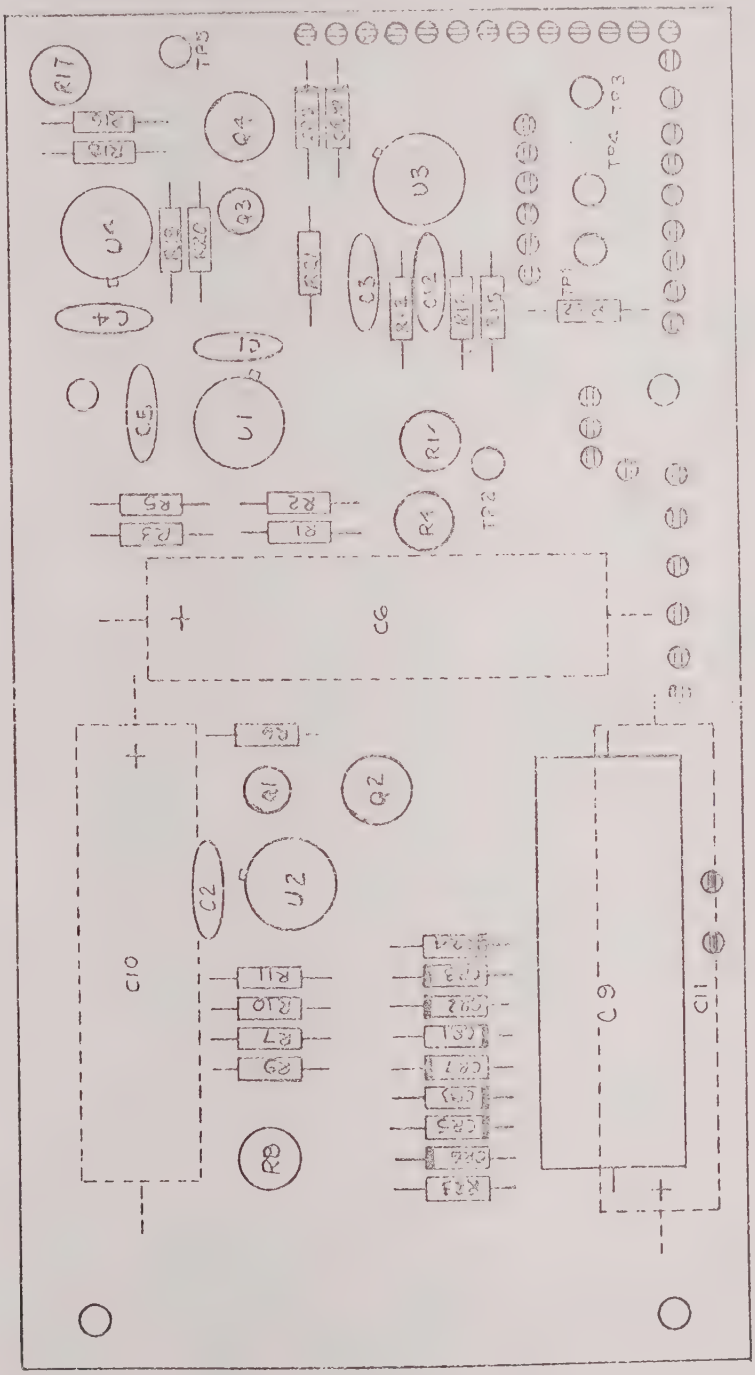


6000 SERIES POWER SUPPLY P.C. ASSEMBLY, D39467A

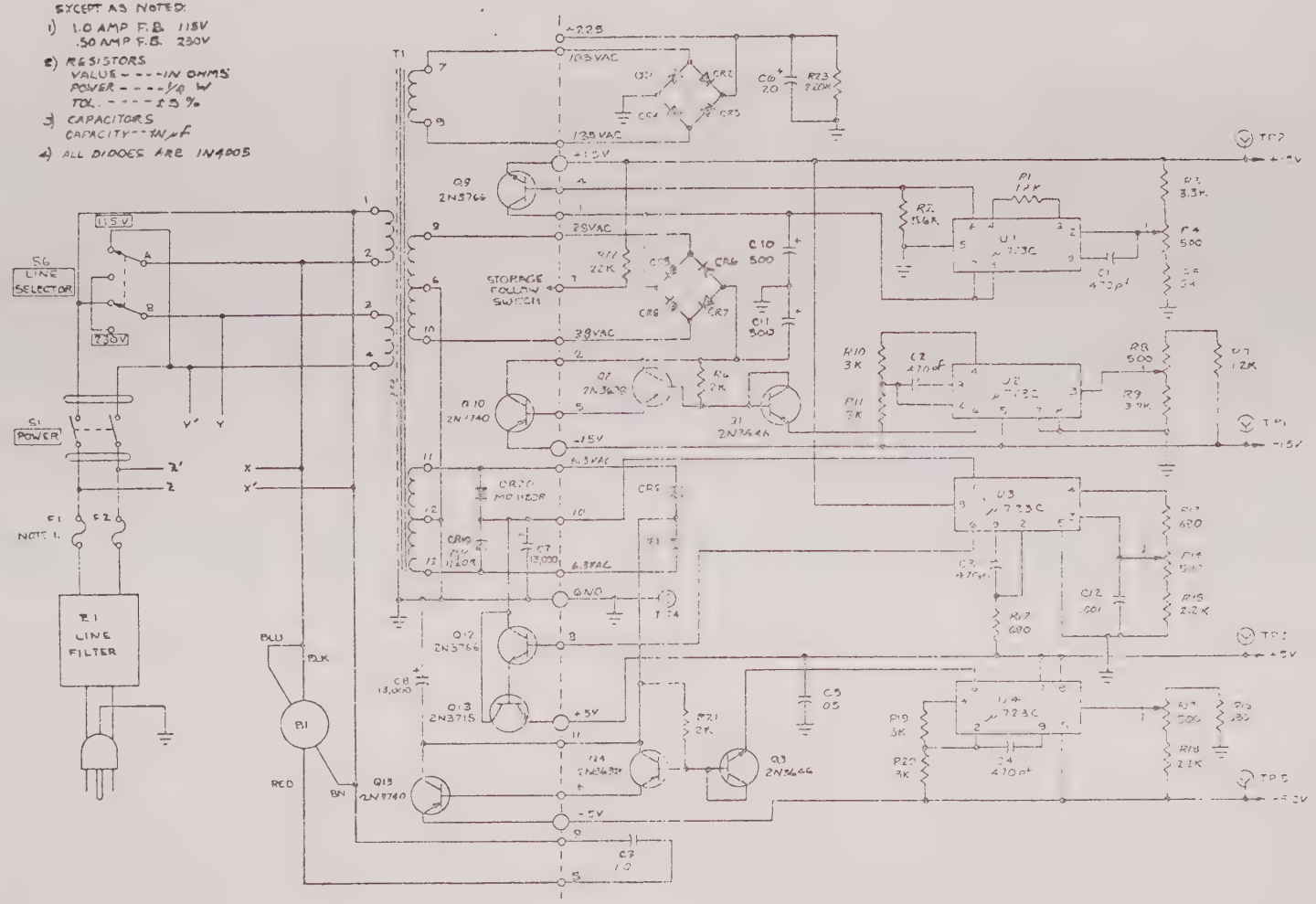


6000 SERIES POWER SUPPLY P.C. ASSEMBLY, C19735E

## 6000 SERIES POWER SUPPLY P.C. ASSEMBLY PARTS LIST

| Ref. | Description | SD Part No. | Manufacturers Part No. |
|---|---|---|---|
| | Power Supply P.C. Assembly | D39467A | |
| | Power Supply Schematic | C19735E | |
| C1 | Capacitor, 470pF, 300V | C0542 | |
| C2 | Capacitor, 470pF, 300V | C0542 | |
| C3 | Capacitor, 470pF, 300V | C0542 | |
| C4 | Capacitor, 470pF, 300V | C0542 | |
| C5 | Capacitor, .05µF, 12V | C0672 | RMC Type M-12 |
| C6 | Capacitor, 20µF, 350V | C1094 | Sprague 39D206F350FL4 |
| C7 | Not Used | | |
| C8 | Not Used | | |
| C9 | Capacitor, 1µF, 400V | C0724 | |
| C10 | Capacitor, 500µF, 30V | C1134 | Sprague 39K507GD30FL4 |
| C11 | Capacitor, 500µF, 30V | C1134 | Sprague 39K507GD30FL4 |
| C12 | Capacitor, .001µF, 1000V | C0235 | Centralab DD102 |
| CR1 | Diode, 1N4005 | CR0284 | |
| CR2 | Diode, 1N4005 | CR0284 | |
| CR3 | Diode, 1N4005 | CR0284 | |
| CR4 | Diode, 1N4005 | CR0284 | |
| CR5 | Diode, 1N4005 | CR0284 | |
| CR6 | Diode, 1N4005 | CR0284 | |
| CR7 | Diode, 1N4005 | CR0284 | |
| CR8 | Diode, 1N4005 | CR0284 | |
| CR9 | Diode, 1N4005 | CR0284 | |
| CR10 | Diode, 1N4005 | CR0284 | |
| Q1 | Transistor, 2N3646 | Q0218 | |
| Q2 | Transistor, 2N3638 | Q0181 | |
| Q3 | Transistor, 2N3646 | Q0218 | |
| Q4 | Transistor, 2N3638 | Q0181 | |
| R1 | Resistor, 1.8K, 1/4W, 5% | R0959 | A-B 1.8K, 1/4W, 5% |
| R2 | Resistor, 5.6K, 1/4W, 5% | R0821 | A-B 5.6K, 1/4W, 5% |
| R3 | Resistor, 3.3K, 1/4W, 5% | R0742 | A-B 3.3K, 1/4W, 5% |
| R4 | Resistor, 500Ω, Pot | R2375 | CTS 340 |
| R5 | Resistor, 3K, 1/4W, 5% | R0711 | A-B 3K, 1/4W, 5% |

| Ref. | Description | SD Part No. | Manufacturers Part No. |
|---|---|---|---|
| R6 | Resistor, 2K, 1/4W, 5% | R0734 | A-B 2K, 1/4W, 5% |
| R7 | Resistor, 1.2K, 1/4W, 5% | R0809 | A-B 1.2K, 1/4W, 5% |
| R8 | Resistor, 500Ω, Pot | R2375 | CTS 340 |
| R9 | Resistor, 3.9K, 1/4W, 5% | R0939 | A-B 3.9K, 1/4W, 5% |
| R10 | Resistor, 3K, 1/4W, 5% | R0711 | A-B 3K, 1/4W, 5% |
| R11 | Resistor, 3K, 1/4W, 5% | R0711 | A-B 3K, 1/4W, 5% |
| R12 | Resistor, 680Ω, 1/4W, 5% | R1234 | A-B 680Ω, 1/4W, 5% |
| R13 | Resistor, 680Ω, 1/4W, 5% | R1234 | A-B 680Ω, 1/4W, 5% |
| R14 | Resistor, 500Ω, Pot | R2375 | CTS 340 |
| R15 | Resistor, 2.2K, 1/4W, 5% | R0749 | A-B 2.2K, 1/4W, 5% |
| R16 | Resistor, 680Ω, 1/4W, 5% | R1234 | A-B 680Ω, 1/4W, 5% |
| R17 | Resistor, 500Ω, Pot | R2375 | CTS 340 |
| R18 | Resistor, 2.2K, 1/4W, 5% | R0749 | A-B 2.2K, 1/4W, 5% |
| R19 | Resistor, 3K, 1/4W, 5% | R0711 | A-B 3K, 1/4W, 5% |
| R20 | Resistor, 3K, 1/4W, 5% | R0711 | A-B 3K, 1/4W, 5% |
| R21 | Resistor, 1K, 1/4W, 5% | R0765 | A-B 1K, 1/4W, 5% |
| R22 | Resistor, 22K, 1/4W, 5% | R0768 | A-B 22K, 1/4W, 5% |
| R23 | Resistor, 220K, 1/4W, 5% | R0967 | A-B 220K, 1/4W, 5% |
| U1 | Integrated Circuit, µ723C | 25756 | Fairchild U5R7723393 |
| U2 | Integrated Circuit, µ723C | 25756 | Fairchild U5R7723393 |
| U3 | Integrated Circuit, µ723C | 25756 | Fairchild U5R7723393 |
| U4 | Integrated Circuit, µ723C | 25756 | Fairchild U5R7723393 |

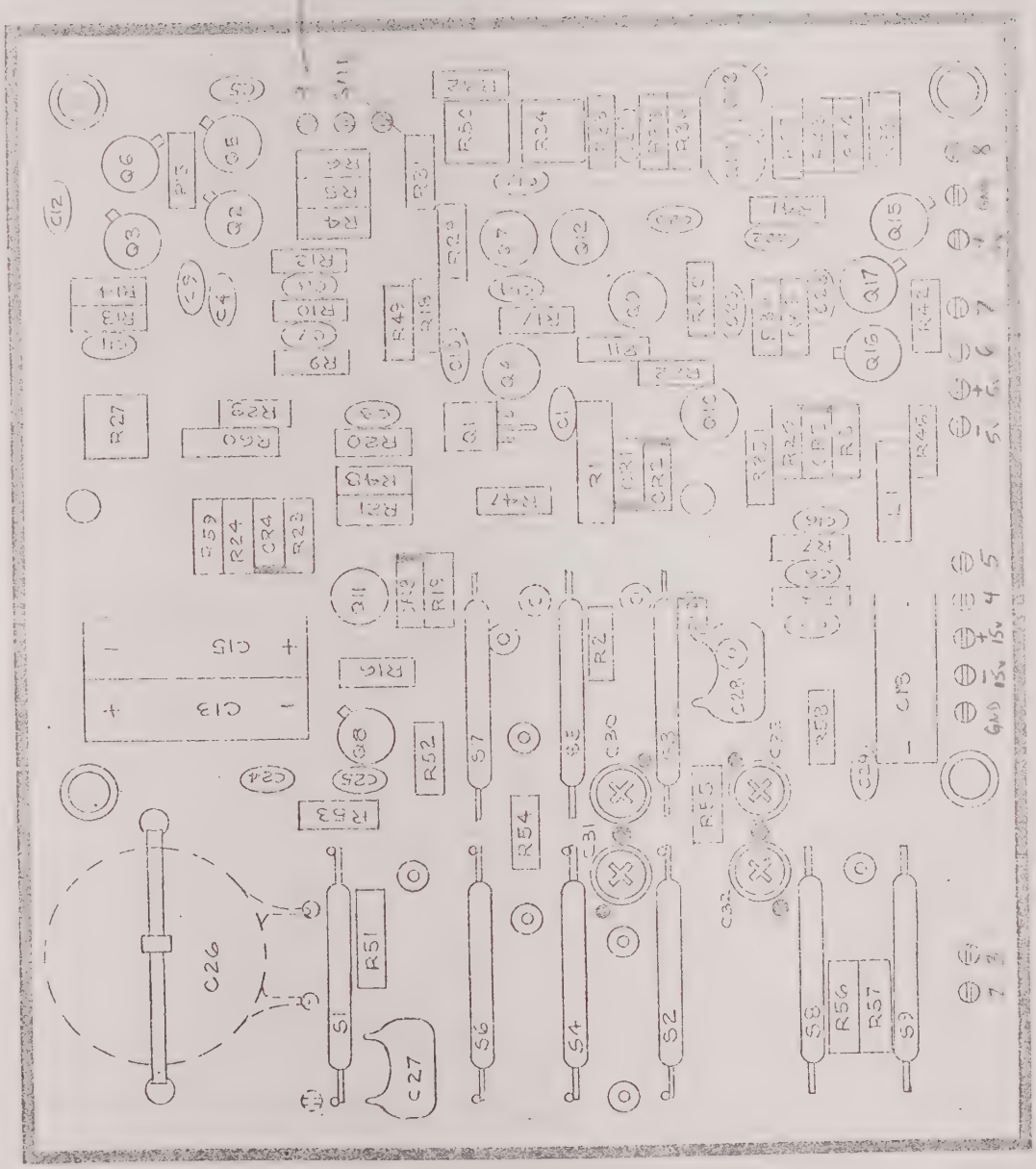


Figure 6-4. Assembly [illegible] MHz A-Amplifier [33-523]

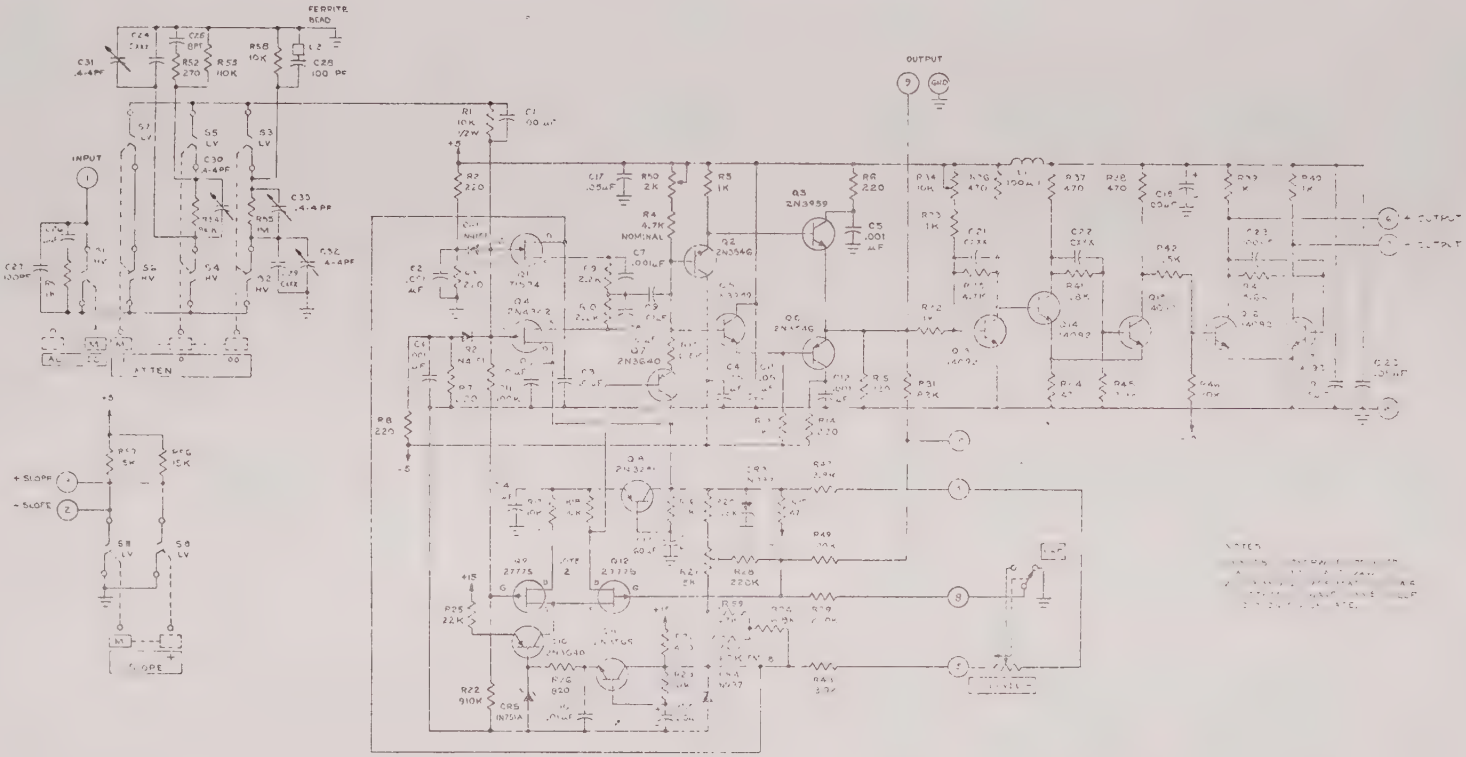


Figure 6-5. Schematic 100 MHz A-Amplifier [33295]

100 MHz "A" AMP Parts List

| Ref. | Description | SD Part No. | Manufacturers Part No. |
|---|---|---|---|
| | 100 MHz A Amp P.C. Assembly | 33262 | |
| C1 | Capacitor, .001μF, 1kV Disc. | C0235 | Centralab DD102 |
| C2 | Capacitor, .001μF, 1kV Disc. | C0235 | Centralab DD102 |
| C3 | Capacitor, .01μF, 150V, Disc. | C0233 | Centralab DDM103 |
| C4 | Capacitor, .05μF, 12V, Disc. | C0672 | RMC Type M-12 |
| C5 | Capacitor, .001μF, 1kV, Disc. | C0235 | Centralab DD102 |
| C6 | Capacitor, .001μF, 1kV, Disc. | C0235 | Centralab DD102 |
| C7 | Capacitor, .001μF, 1kV, Disc. | C0235 | Centralab DD102 |
| C8 | Capacitor, .001μF, 1kV, Disc. | C0235 | Centralab DD102 |
| C9 | Capacitor, .01μF, 150V, Disc. | C0233 | Centralab DDM103 |
| C10 | Capacitor, .01μF, 150V, Disc. | C0233 | Centralab DDM103 |
| C11 | Capacitor, .05μF, 12V, Disc. | C0672 | RMC Type M-12 |
| C12 | Capacitor, .001μF, 1kV, Disc. | C0235 | Centralab DD102 |
| C13 | Capacitor, 60μF, 50V, Tant | C0511 | |
| C14 | Capacitor, .01μF, 150V, Disc. | C0233 | Centralab DDM103 |
| C15 | Capacitor, 60μF, 50V, Tant | C0511 | |
| C16 | Capacitor, .01μF, 150V, Disc. | C0233 | Centralab DDM103 |
| C17 | Capacitor, .05μF, 12V, Disc. | C0672 | RMC Type M-12 |
| C18 | Capacitor, 100μF, 10V, Tant | C0369 | GE62F301 |
| C19 | Capacitor, .05μF, 12V, Disc. | C0672 | RMC Type M-12 |
| C20 | Capacitor, .05μF, 12V Disc. | C0672 | RMC Type M-12 |
| C21 | Cxx | | |
| C22 | Cxx | | |
| C23 | Capacitor, 100pF, Mica | C1156 | |
| C24 | Cxx | | |
| C25 | Capacitor, 8pF, 500V, Disc. | C0597 | |
| C26 | Capacitor, .1μF, 500V, Disc. 20% | C1106 | Sprague SGA-P10 |
| C27 | Capacitor, 100pF, 500V, Mica | C1075 | |
| C28 | Capacitor, 100pF, 500V, Mica | C1075 | |
| C29 | Cxx | | |
| C30 | Not Available | | |
| C31 | Not Available | | |
| C32 | Not Available | | |
| C33 | Not Available | | |
| CR1 | Diode, 1N4151 | CR0150 | |
| CR2 | Diode, 1N4151 | CR0150 | |

| Ref. | Description | SD Part No. | Manufacturers Part No. |
|---|---|---|---|
| CR3 | Diode, 1N937 | CR0109 | |
| CR4 | Diode, 1N937 | CR0109 | |
| CR5 | Diode, 1N751A | CR0095 | |
| L1 | Inductor, 100µH | L0073 | Stanwyck Dink .15 |
| L2 | Ferrite Bead | H0654 | Ferroxcube 56-590-65/38 |
| Q1 | Transistor, T1534 | Q0244 | |
| Q2 | Transistor, 2N3546 | Q0192 | |
| Q3 | Transistor, 2N3959 | Q0200 | |
| Q4 | Transistor, 2N4342 | Q0243 | |
| Q5 | Qn3959 | Q0200 | |
| Q6 | Transistor, 2N3546 | Q0192 | |
| Q7 | Transistor, 2N3640 | Q0178 | |
| Q8 | Transistor, 2N3251 | Q0174 | |
| Q9 | Matched Pair | 27775 | |
| Q10 | Transistor, 2N3640 | Q0178 | |
| Q11 | Transistor, 2N3656 | Q0237 | |
| Q12 | Matched Pair | 27775 | |
| Q13 | Transistor, 14092 | 14092 | |
| Q14 | Transistor, 14092 | 14092 | |
| Q15 | Transistor, 14092 | 14092 | |
| Q16 | Transistor, 14092 | 14092 | |
| Q17 | Transistor, 14092 | 14092 | |
| R1 | Resistor, 10k, 1/2W, 5% | R0292 | Allen Bradley CB1035 |
| R2 | Resistor, 220Ω, 1/4W, 5% | R0760 | Allen Bradley CB2215 |
| R3 | Resistor, 220Ω, 1/4W, 5% | R0760 | Allen Bradley CB2215 |
| R4 | Resistor, 4.7k, 1/4W, 5% | R0892 | Allen Bradley CB4725 |
| R5 | Resistor, 1k, 1/4W, 5% | R0765 | Allen Bradley CB1025 |
| R6 | Resistor, 220Ω, 1/4W, 5% | R0769 | Allen Bradley CB2215 |
| R7 | Resistor, 220Ω, 1/4W, 5% | R0760 | Allen Bradley CB2215 |
| R8 | Resistor, 220Ω, 1/4W, 5% | R0760 | Allen Bradley CB2215 |
| R9 | Resistor, 2.2k, 1/4W, 5% | R0749 | Allen Bradley CB2225 |
| R10 | Resistor, 2.2k, 1/4W, 5% | R0749 | Allen Bradley CB2225 |
| R11 | Resistor, 100k, 1/4W, 5% | R0741 | Allen Bradley CB1045 |
| R12 | Resistor, 6.8k, 1/4W, 5% | R0696 | Allen Bradley CB6825 |
| R13 | Resistor, 1k, 1/4W, 5% | R0765 | Allen Bradley CB1025 |
| R14 | Resistor, 220Ω, 1/4W, 5% | R0760 | Allen Bradley CB2215 |

| Ref. | Description | SD Part No. | Manufacturers Part No. |
|---|---|---|---|
| CR3 | Diode, 1N937 | CR0109 | |
| CR4 | Diode, 1N937 | CR0109 | |
| CR5 | Diode, 1N751A | CR0095 | |
| L1 | Inductor, 100μH | L0073 | Stanwyck Dink .15 |
| L2 | Ferrite Bead | H0654 | Ferroxcube 56-590-65/38 |
| Q1 | Transistor, T1534 | Q0244 | |
| Q2 | Transistor, 2N3546 | Q0192 | |
| Q3 | Transistor, 2N3959 | Q0200 | |
| Q4 | Transistor, 2N4342 | Q0243 | |
| Q5 | Qn3959 | Q0200 | |
| Q6 | Transistor, 2N3546 | Q0192 | |
| Q7 | Transistor, 2N3640 | Q0178 | |
| Q8 | Transistor, 2N3251 | Q0174 | |
| Q9 | Matched Pair | 27775 | |
| Q10 | Transistor, 2N3640 | Q0178 | |
| Q11 | Transistor, 2N3656 | Q0237 | |
| Q12 | Matched Pair | 27775 | |
| Q13 | Transistor, 14092 | 14092 | |
| Q14 | Transistor, 14092 | 14092 | |
| Q15 | Transistor, 14092 | 14092 | |
| Q16 | Transistor, 14092 | 14092 | |
| Q17 | Transistor, 14092 | 14092 | |
| R1 | Resistor, 10k, 1/2W, 5% | R0292 | Allen Bradley CB1035 |
| R2 | Resistor, 220Ω, 1/4W, 5% | R0760 | Allen Bradley CB2215 |
| R3 | Resistor, 220Ω, 1/4W, 5% | R0760 | Allen Bradley CB2215 |
| R4 | Resistor, 4.7k, 1/4W, 5% | R0892 | Allen Bradley CB4725 |
| R5 | Resistor, 1k, 1/4W, 5% | R0765 | Allen Bradley CB1025 |
| R6 | Resistor, 220Ω, 1/4W, 5% | R0769 | Allen Bradley CB2215 |
| R7 | Resistor, 220Ω, 1/4W, 5% | R0760 | Allen Bradley CB2215 |
| R8 | Resistor, 220Ω, 1/4W, 5% | R0760 | Allen Bradley CB2215 |
| R9 | Resistor, 2.2k, 1/4W, 5% | R0749 | Allen Bradley CB2225 |
| R10 | Resistor, 2.2k, 1/4W, 5% | R0749 | Allen Bradley CB2225 |
| R11 | Resistor, 100k, 1/4W, 5% | R0741 | Allen Bradley CB1045 |
| R12 | Resistor, 6.8k, 1/4W, 5% | R0696 | Allen Bradley CB6825 |
| R13 | Resistor, 1k, 1/4W, 5% | R0765 | Allen Bradley CB1025 |
| R14 | Resistor, 220Ω, 1/4W, 5% | R0760 | Allen Bradley CB2215 |

| Ref. | Description | SD Part No. | Manufacturers Part No. |
|---|---|---|---|
| R15 | Resistor, 120Ω, 1/4W, 5% | R1461 | Allen Bradley CB1215 |
| R16 | Resistor, 10k, 1/4W, 5% | R0766 | Allen Bradley CB1035 |
| R17 | Resistor, 10k, 1/4W, 5% | R0766 | Allen Bradley CB1035 |
| R18 | Resistor, 10k, 1/4W, 5% | R0766 | Allen Bradley CB1035 |
| R19 | Resistor, 470Ω, 1/4W, 5% | R0144 | Allen Bradley CB4715 |
| R20 | Resistor, 6.8k, 1/4W, 5% | R0696 | Allen Bradley CB6825 |
| R21 | Resistor, 470Ω, 1/4W, 5% | R1044 | Allen Bradley CB4715 |
| R22 | Resistor, 910k, 1/4W, 5% | R2312 | Allen Bradley CB9135 |
| R23 | Resistor, 10k, 1/4W, 5% | R0766 | Allen Bradley CB1035 |
| R24 | Resistor, 6.8k, 1/4W, 5% | R0696 | Allen Bradley CB6825 |
| R25 | Resistor, 22k, 1/4W, 5% | R0768 | Allen Bradley CB2235 |
| R26 | Resistor, 820Ω, 1/4W, 5% | R0762 | Allen Bradley CB8215 |
| R27 | Resistor, POT, 5k, 1/2W, 30% | R2187 | Helipot 62PR5K |
| R28 | Resistor, 220k, 1/4W, 5% | R0967 | Allen Bradley CB2235 |
| R30 | Resistor, 220k, 1/4W, 5% | R0967 | Allen Bradley CB2235 |
| R31 | Resistor, 82k, 1/4W, 5% | R0784 | Allen Bradley CB8235 |
| R32 | Resistor, 1k, 1/4W, 5% | R0765 | Allen Bradley CB1025 |
| R33 | Resistor, 1k, 1/4W, 5% | R0765 | Allen Bradley CB1025 |
| R34 | Resistor, POT, 10k | R2383 | Helipot 62PR10k |
| R35 | Resistor, 4.7k, 1/4W, 5% | R0892 | Allen Bradley CB4725 |
| R36 | Resistor, 470Ω, 1/4W, 5% | R0144 | Allen Bradley CB4715 |
| R37 | Resistor, 470Ω, 1/4W, 5% | R0144 | Allen Bradley CB4715 |
| R38 | Resistor, 470Ω, 1/4W, 5% | R0144 | Allen Bradley CB4715 |
| R39 | Resistor, 1k, 1/4W, 5% | R0765 | Allen Bradley CB1025 |
| R40 | Resistor, 1k, 1/4W, 5% | R0765 | Allen Bradley CB1025 |
| R41 | Resistor, 1.8k, 1/4W, 5% | R0959 | Allen Bradley CB1825 |
| R42 | Resistor, 1.5k, 1/4W, 5% | R0783 | Allen Bradley CB1525 |
| R43 | Resistor, 5.6k, 1/4W, 5% | R0821 | Allen Bradley CB5625 |
| R44 | Resistor, 47Ω, 1/4W, 5% | R0743 | Allen Bradley CB4705 |
| R45 | Resistor, 3.3k, 1/4W, 5% | R0742 | Allen Bradley CB3325 |
| R46 | Resistor, 30k, 1/4W, 5% | R0715 | Allen Bradley CB3035 |
| R47 | Resistor, 3.9k, 1/4W, 5% | R0939 | Allen Bradley CB3925 |
| R48 | Resistor, 3.9k, 1/4W, 5% | R0939 | Allen Bradley CB3925 |
| R49 | Resistor, 100k, 1/4W, 5% | R0741 | Allen Bradley CB1045 |
| R50 | Resistor, POT, 2k | R2382 | Helipot 62PR2K |
| R51 | Resistor, 1k, 1/4W, 5% | R0765 | Allen Bradley CB1025 |

| Ref. | Description | SD Part No. | Manufacturers Part No. |
|---|---|---|---|
| R52 | Resistor, 270Ω, 1/4W, 5% | R0694 | Allen Bradley CB2715 |
| R53 | Resistor, 100k, 1/4W, 5% | R1010 | Allen Bradley CB1135 |
| R54 | Resistor, 910k, 1/4W, 5% | R2312 | Allen Bradley CB9135 |
| R55 | Resistor, 1M, 1/4W, 5% | R0962 | Allen Bradley CB1055 |
| R56 | Resistor, 15k, 1/4W, 5% | R0728 | Allen Bradley CB1525 |
| R57 | Resistor, 15k, 1/4W, 5% | R0728 | Allen Bradley CB1525 |
| R58 | Resistor, 10k, 1/4W, 5% | R0766 | Allen Bradley CB1035 |
| R59 | Resistor, 47k, 1/4W, 5% | R0777 | Allen Bradley CB4725 |
| R60 | Resistor, 4.7k (TM 1/8) 1/8W, 10% | R2589 | |
| S1 | Switch, Reed, 1500V | 19369 | |
| S2 | Switch, Reed, 1500V | 19369 | |
| S3 | Switch, Reed, 15V | 19368 | |
| S4 | Switch, Reed, 1500V | 19369 | |
| S5 | Switch, Reed, 15V | 19368 | |
| S6 | Switch, Reed, 1500V | 19369 | |
| S7 | Switch, Reed, 15V | 19368 | |
| S8 | Switch, Reed, 15V | 19368 | |
| S9 | Switch, Reed, 15V | 19368 | |

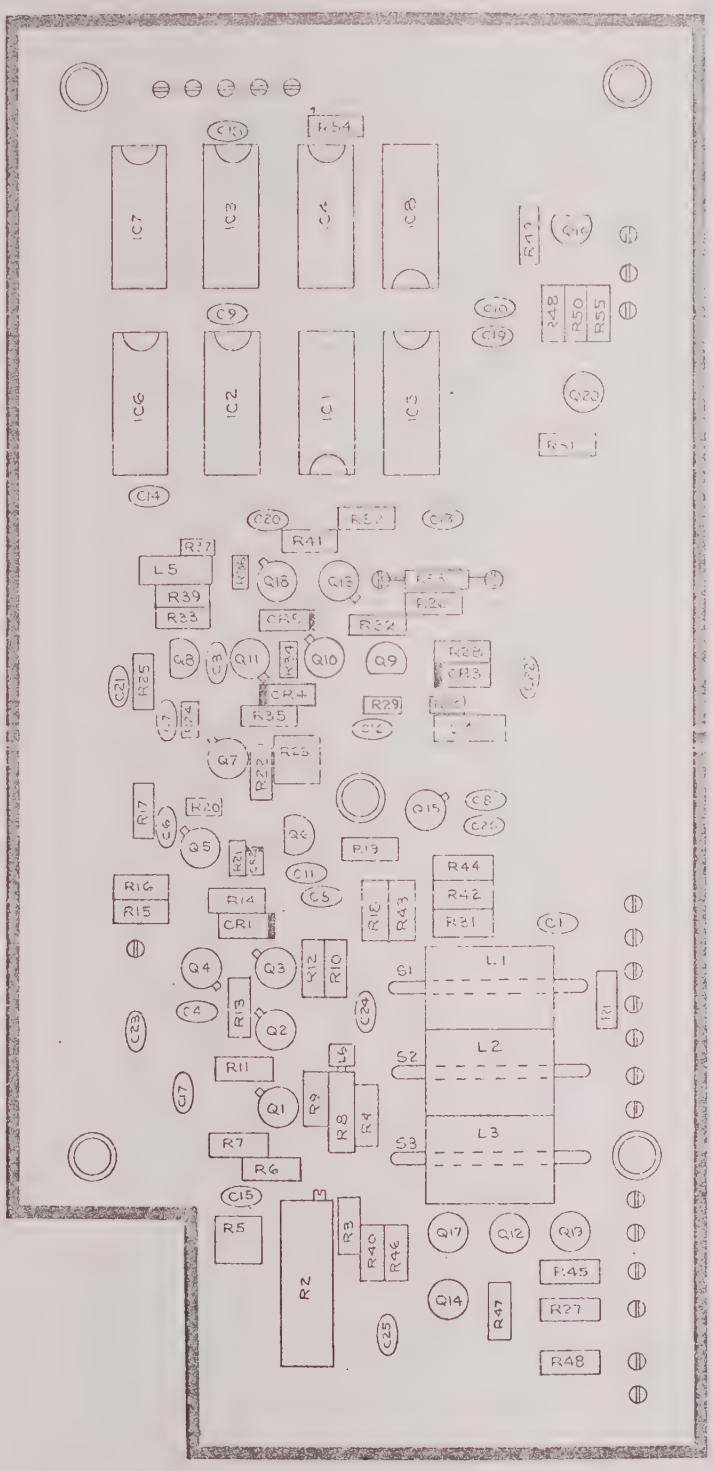


Figure 6-6. Assembly 100 MHz Amp & Decade [33288]

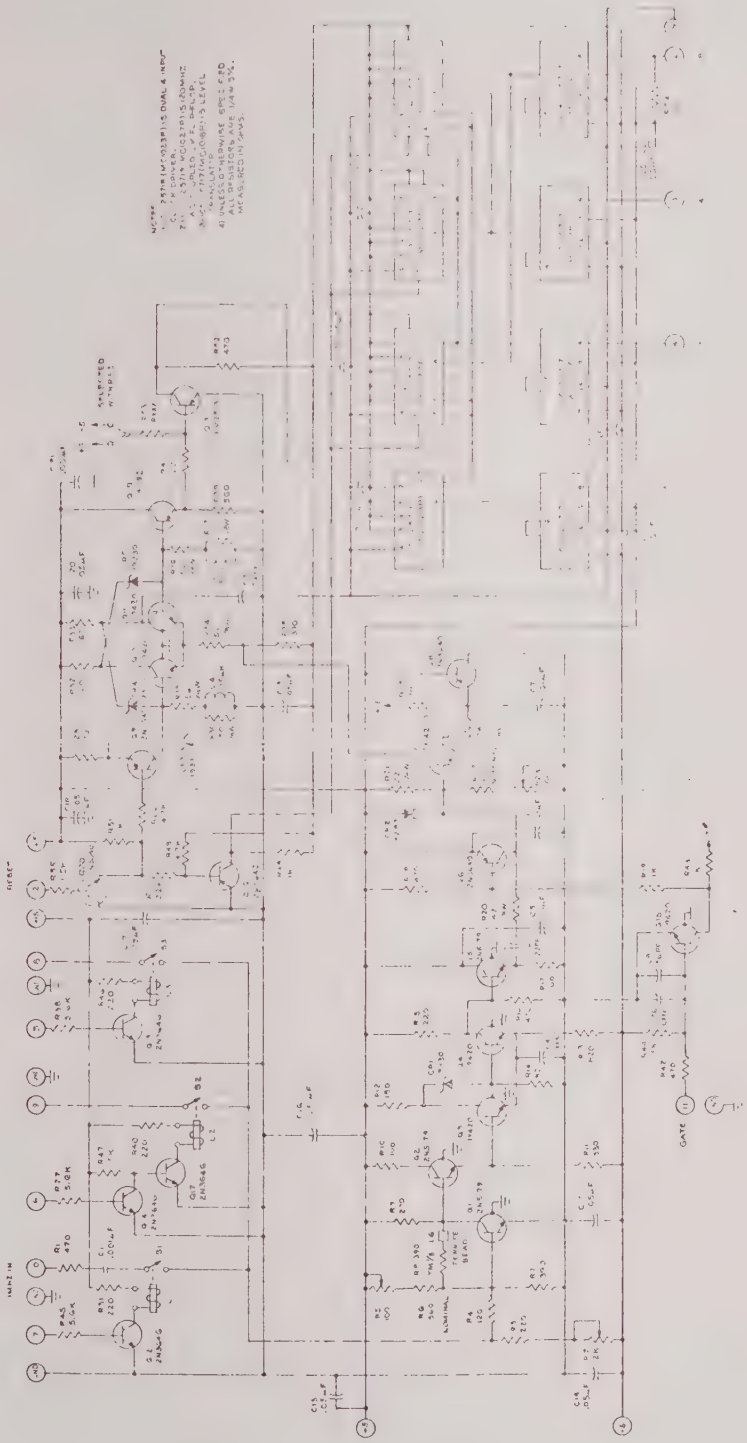

Figure 6-7. Schematic 100 MHz Amp & Decade [33285A]

100 MHz AMP & Decade P.C. Assembly Parts List

| Ref. | Description | SD Part No. | Manufacturers Part No. |
|---|---|---|---|
| C1 | Capacitor, .001μF, Disc. | C0233 | Centralab DD102 |
| C2 | Not Used | | |
| C3 | Capacitor, (Factory Selected Value) | | |
| C4 | Capacitor, (Factory Selected Value) | | |
| C5 | Capacitor, .01μF, Disc. 100V | C0556 | RMC TA110 |
| C6 | Capacitor, 22pF | C0529 | Elmenco DM15C-220k-500V |
| C7 | Capacitor, 0.1μF, Disc. 100V | C0556 | RMC TA110 |
| C8 | Capacitor, 56pF | C0534 | Elmenco DM-15E-560k-500 |
| C9 | Capacitor, .01μF, Disc. 100V | C0556 | RMC TA110 |
| C10 | Capacitor, .01μF, Disc. 100V | C0556 | RMC TA110 |
| C11 | Capacitor, .01μF, Disc. 100V | C0556 | RMC TA110 |
| C12 | Not Used | | |
| C13 | Capacitor, .05μF | C0672 | RMC Type M-12 |
| C14 | Capacitor, .05μF | C0672 | RMC Type M-12 |
| C15 | Capacitor, .05μF | C0672 | RMC Type M-12 |
| C16 | Capacitor, .05μF | C0672 | RMC Type M-12 |
| C17 | Capacitor, .05μF | C0672 | RMC Type M-12 |
| C18 | Capacitor, .05μF | C0672 | RMC Type M-12 |
| C19 | Capacitor, .05μF | C0672 | RMC Type M-12 |
| C20 | Capacitor, .05μF | C0672 | RMC Type M-12 |
| C21 | Capacitor, .05μF | C0672 | RMC Type M-12 |
| C22 | Capacitor, .05μF | C0672 | RMC Type M-12 |
| C23 | Capacitor, .05μF | C0672 | RMC Type M-12 |
| C24 | Capacitor, .05μF | C0672 | RMC Type M-12 |
| C25 | Capacitor, .05μF | C0672 | RMC Type M-12 |
| C26 | Capacitor, (Factory Selected Value) | | |
| CR1 | Diode, 19330 | 19330 | |
| CR2 | Diode, 25287 | 25287 | |
| CR3 | Diode, 19330 | 19330 | |
| CR4 | Diode, 19330 | 19330 | |
| CR5 | Diode, 19330 | 19330 | |
| L1 | Coil, Reed Switch | L0147 | Coto Coil U-20003 |
| L2 | Coil, Reed Switch | L0147 | Coto Coil U-20003 |
| L3 | Coil, Reed Switch | L0147 | Coto Coil U-20003 |
| L4 | Choke, .15μH | L0069 | Stanwyck Dink .15 |
| L5 | Choke, .15μH | L0069 | Stanwyck Dink .15 |

| Ref. | Description | SD Part No. | Manufacturers Part No. |
|---|---|---|---|
| L6 | Ferrite Bead | H0654 | Ferroxcube 56-590-65/3B |
| H2 | Ferrite Bead | H0654 | Ferroxcube 56-590-65/3B |
| IC1 | Integrated Circuit, MC1023P | 25718 | |
| IC2 | Integrated Circuit, MC1027P | 25719 | |
| IC3 | Integrated Circuit, MC1027P | 25719 | |
| IC4 | Integrated Circuit, MC1027P | 25719 | |
| IC5 | Integrated Circuit, MC1018P | 25717 | |
| IC6 | Integrated Circuit, MC1018P | 25717 | |
| IC7 | Integrated Circuit, MC1018P | 25717 | |
| IC8 | Integrated Circuit, MC1018P | 25717 | |
| Q1 | Transistor, 2N5179 | Q0269 | |
| Q2 | Transistor, 2N5179 | Q0269 | |
| Q3 | Transistor, 19420 | 19420 | |
| Q4 | Transistor, 19420 | 19420 | |
| Q5 | Transistor, 2N5179 | Q0269 | |
| Q6 | Transistor, 2N3640 | Q0178 | |
| Q7 | Transistor, 2N4260 | Q0272 | |
| Q8 | Transistor, 2N3640 | Q0178 | |
| Q9 | Transistor, 2N3640 | Q0178 | |
| Q10 | Transistor, 19420 | 19420 | |
| Q11 | Transistor, 19420 | 19420 | |
| Q12 | Transistor, 2N3646 | Q0218 | |
| Q13 | Transistor, SM2813 | Q0270 | |
| Q14 | Transistor, 2N3646 | Q0218 | |
| Q15 | Transistor, 19420 | 19420 | |
| Q16 | Transistor, 2N3640 | Q0178 | |
| Q17 | Transistor, 2N3646 | Q0218 | |
| Q18 | Transistor, 14092 | 14092 | |
| Q19 | Transistor, 2N3646 | Q0218 | |
| Q20 | Transistor, 2N3646 | Q0218 | |
| S1 | Reed Switch, 15V | S0326 | |
| S2 | Reed Switch, 15V | S0326 | |
| S3 | Reed Switch, 15V | S0326 | |
| R1 | Resistor, 470Ω, 1/4W, 5% | R1044 | Allen Bradley CB4715 |
| R2 | Resistor, 2k POT | R1287 | Bourns 3067P-1-202 |

| Ref. | Description | SD Part No. | Manufacturers Part No. |
|---|---|---|---|
| R3 | Resistor, 220Ω, 1/4W, 5% | R0760 | Allen Bradley CB2215 |
| R4 | Resistor, 120Ω, 1/4W, 5% | R1461 | Allen Bradley CB1215 |
| R5 | Resistor, 100Ω POT | R2374 | (CTS-340) |
| R6 | Resistor, 560Ω, 1/4W, 5% | R0819 | Allen Bradley CB5615 |
| R7 | Resistor, 390Ω, 1/4W, 5% | R0880 | Allen Bradley CB3915 |
| R8 | Resistor, Temp. Sensing 390 | R2446 | T.I. (TM 1/8) |
| R9 | Resistor, 270Ω, 1/4W, 5% | R0694 | Allen Bradley CB2715 |
| R10 | Resistor, 100Ω, 1/4W, 5% | R0966 | Allen Bradley CB1025 |
| R11 | Resistor, 330Ω, 1/4W, 5% | R0662 | Allen Bradley CB3315 |
| R12 | Resistor, 180Ω, 1/4W, 5% | R1233 | Allen Bradley CB1815 |
| R13 | Resistor, 820Ω, 1/4W, 5% | R0762 | Allen Bradley CB8215 |
| R14 | Resistor, 82Ω, 1/4W, 5% | R1059 | Allen Bradley CB8205 |
| R15 | Resistor, 220Ω, 1/4W, 5% | R0760 | Allen Bradley CB2215 |
| R16 | Resistor, 470Ω, 1/4W, 5% | R1044 | Allen Bradley CB4715 |
| R17 | Resistor, 100Ω, 1/4W, 5% | R0966 | Allen Bradley CB1025 |
| R18 | Resistor, 270Ω, 1/4W, 5% | R1044 | Allen Bradley CB2715 |
| R19 | Resistor, 1k, 1/4W, 5% | R0765 | Allen Bradley CB1025 |
| R20 | Resistor, 47Ω, 1/8W, 5% | R1445 | |
| R21 | Resistor, 22Ω, 1/8W, 5% | R1448 | |
| R22 | Resistor, 330Ω, 1/4W, 5% | R0662 | Allen Bradley CB3315 |
| R23 | Resistor, 100Ω, POT | R2374 | (CTS-340) |
| R24 | Resistor, 22Ω, 1/8W, 5% | R1448 | |
| R25 | Resistor, 910Ω, 1/4W, 5% | R1795 | Allen Bradley CB9115 |
| R26 | Resistor, 4.7k, 1/4W, 5% | R0892 | Allen Bradley CB4725 |
| R27 | Resistor, 5.6k, 1/4W, 5% | R0821 | Allen Bradley CB5625 |
| R28 | Resistor, 270Ω, 1/4W, 5% | R0694 | Allen Bradley CB2715 |
| R29 | Resistor, 56Ω, 1/8W, 5% | R1833 | |
| R30 | Resistor, 150Ω, 1/8W, 5% | R1442 | Allen Bradley 150 DHM |
| R31 | Resistor, 220Ω, 1/4W, 5% | R0760 | Allen Bradley CB2215 |
| R32 | Resistor, 160Ω, 1/4W, 5% | R1572 | Allen Bradley CB1615 |
| R33 | Resistor, 160Ω, 1/4W, 5% | R1572 | Allen Bradley CB1615 |
| R34 | Resistor, 51Ω, 1/8W, 5% | R1832 | |
| R35 | Resistor, 390Ω, 1/4W, 5% | R0880 | Allen Bradley CB3915 |
| R36 | Resistor, 56Ω, 1/8W, 5% | R1833 | |
| R37 | Resistor, 150Ω, 1/8W, 5% | R1442 | Allen Bradley 150 DHM |
| R38 | Resistor, 5.6k, 1/4W, 5% | R0821 | Allen Bradley CB5625 |
| R39 | Resistor, 560Ω, 1/4W, 5% | R0819 | Allen Bradley CB5615 |

100 MHz AMP & Decade P.C. Assembly Parts List (con't.)

| Ref. | Description | SD Part No. | Manufacturers Part No. |
|---|---|---|---|
| R40 | Resistor, 220Ω, 1/4W, 5% | R0760 | Allen Bradley CB2215 |
| R41 | Resistor, 22Ω, 1/4W, 5% | R1436 | Allen Bradley CB2205 |
| R42 | Resistor, 470Ω, 1/4W, 5% | R1044 | Allen Bradley CB4715 |
| R43 | Resistor, 1k, 1/4W, 5% | R0765 | Allen Bradley CB1025 |
| R44 | Resistor, 1.5k, 1/4W, 5% | R0783 | Allen Bradley CB1525 |
| R45 | Resistor, 5.6k, 1/4W, 5% | R0821 | Allen Bradley CB5625 |
| R46 | Resistor, 220Ω, 1/4W, 5% | R0760 | Allen Bradley CB2215 |
| R47 | Resistor, 15k, 1/4W, 5% | | Allen Bradley CB1525 |
| R48 | Resistor, 4.7k, 1/4W, 5% | R0892 | Allen Bradley CB4725 |
| R49 | Resistor, 1k, 1/4W, 5% | R0765 | Allen Bradley CB1025 |
| R50 | Resistor, 2.2k, 1/4W, 5% | R0749 | Allen Bradley CB2225 |
| R51 | Resistor, 1k, 1/4W, 5% | R0765 | Allen Bradley CB1025 |
| R52 | Resistor, 470Ω, 1/4W, 5% | R1044 | Allen Bradley CB4715 |
| R53 | Resistor, (Factory Selected Value) | | |
| R54 | Resistor, 270Ω, 1/4W, 5% | R0694 | Allen Bradley CB2715 |
| R55 | Resistor, 1.5k, 1/4W, 5% | R0783 | Allen Bradley CB1525 |

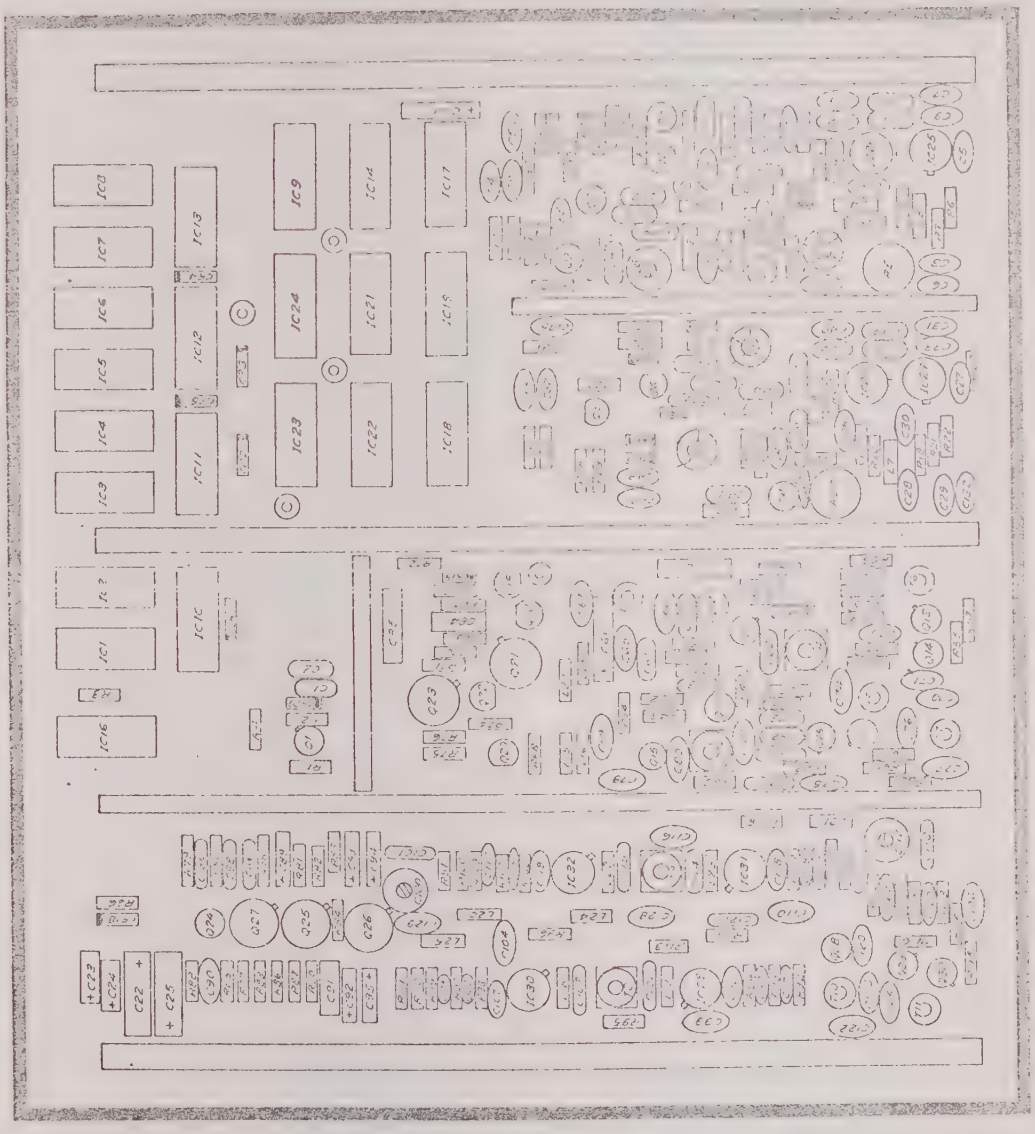


Figure 6-8. ACTO [23733B]

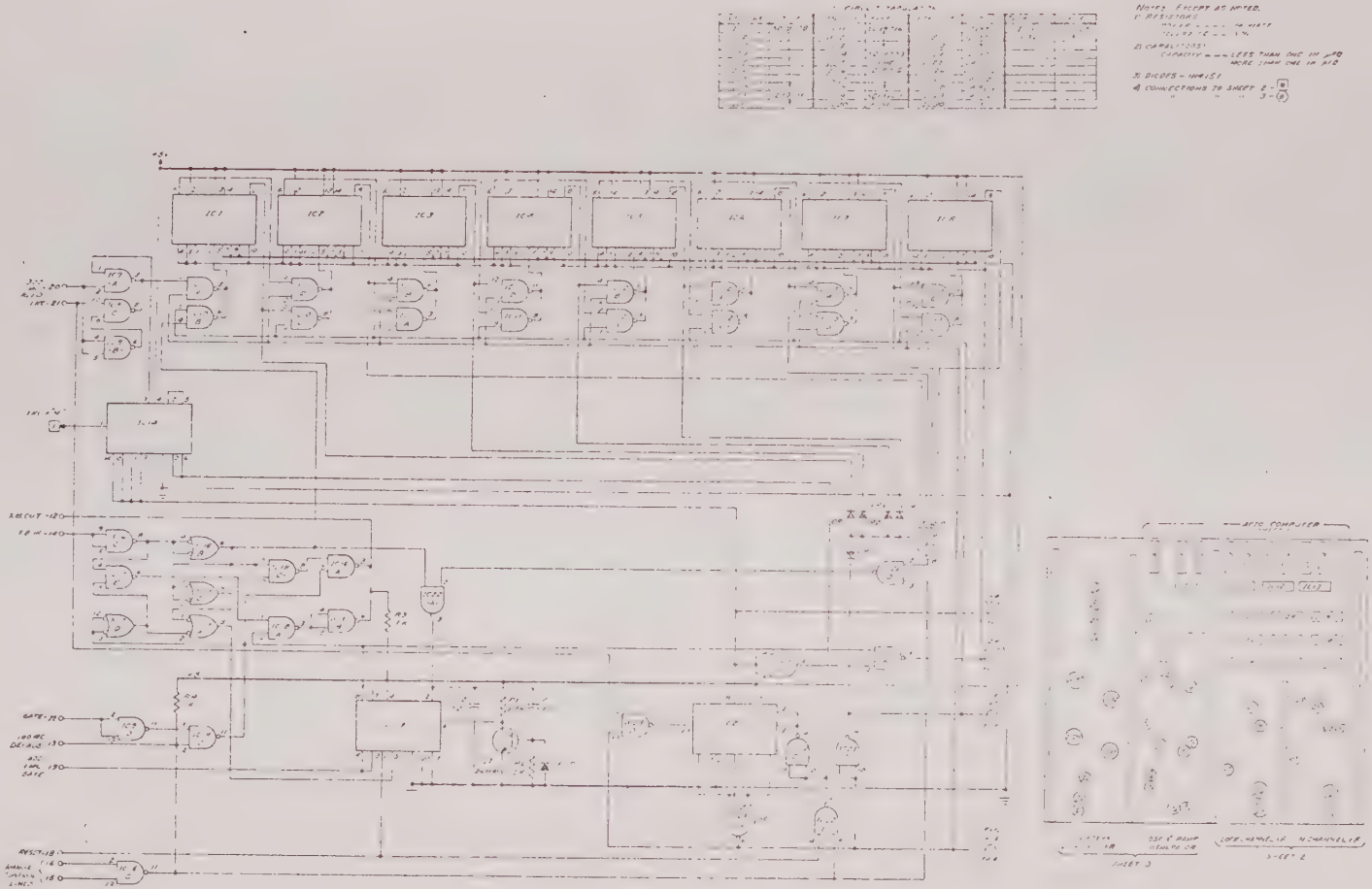

Figure 6-9. Schematic ACTO P.C. Assembly [23730]

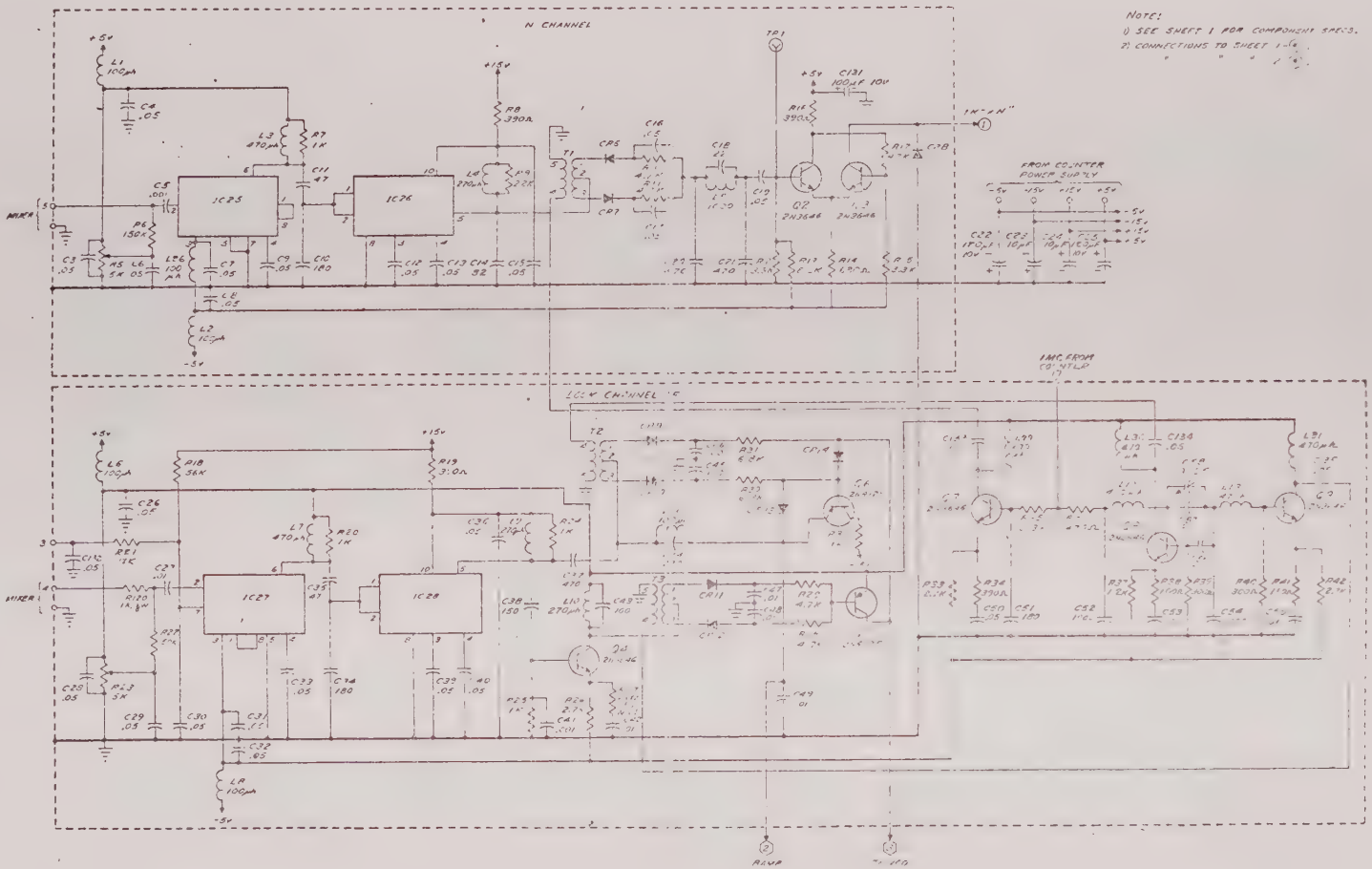


Figure 6-10. Schematic ACTO Sheet 2 [23730]

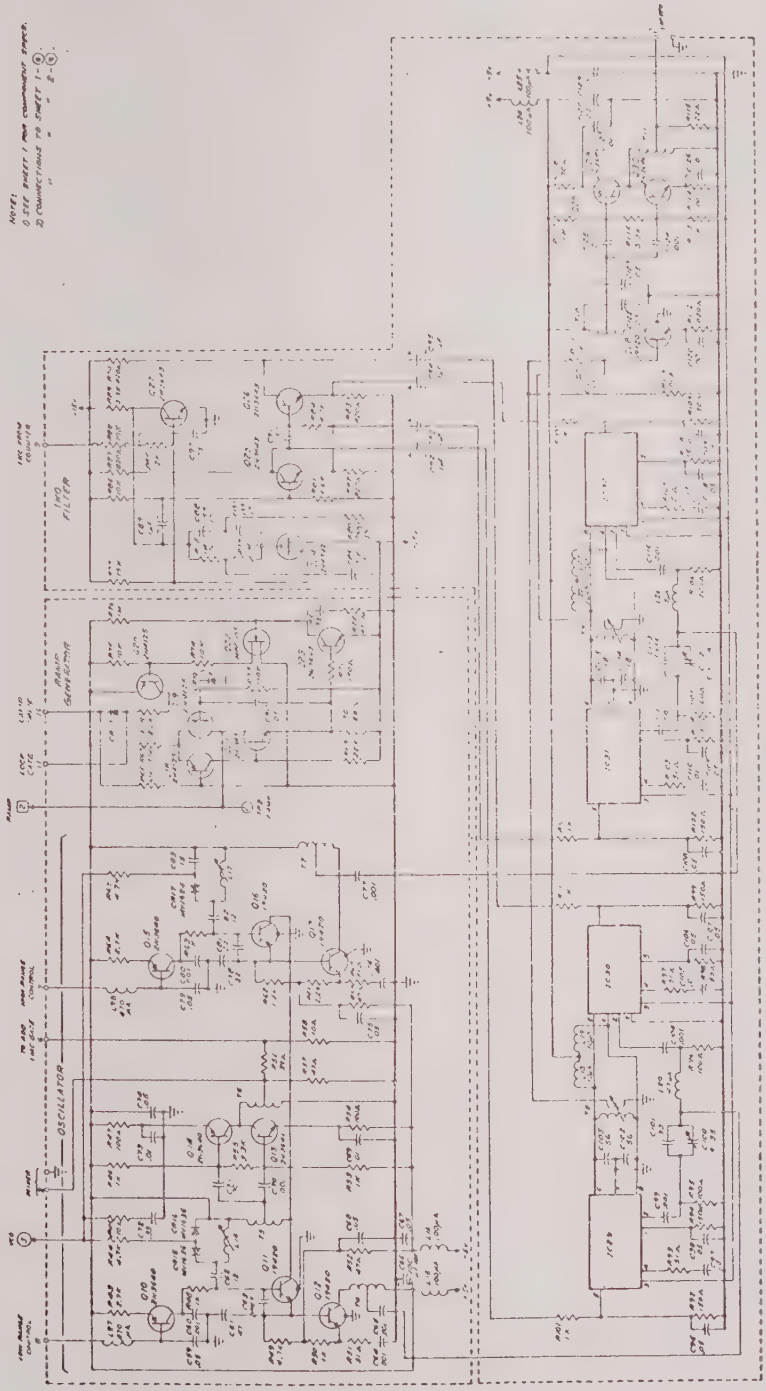

Figure 6-11. Schematic ACTO P.C. Assembly Sheet 3 [23730]

ACTO P.C. Board Parts List

| Ref. | Description | SD Part No. | Manufacturers Part No. |
|---|---|---|---|
| | Assembly Acto P.C. Board | 23733 | |
| C1 | Capacitor, 100pF | C1075 | |
| C2 | Capacitor, 82pF Dipmica | C0873 | Elmenco DM-15E0820J |
| C3 | Capacitor, .05μF | C0675 | Centralab UK-10-503 |
| C4 | Capacitor, .05μF | C0675 | Centralab UK-10-503 |
| C5 | Capacitor, .001μF | C0424 | RMC Type B |
| C6 | Capacitor, .05μF | C0675 | Centralab UK-10-503 |
| C7 | Capacitor, .05μF | C0675 | Centralab UK-10-503 |
| C8 | Capacitor, .05μF | C0675 | Centralab UK-10-503 |
| C9 | Capacitor, .05μF | C0675 | Centralab UK-10-503 |
| C10 | Capacitor, 180pF, Dipmica | C1138 | Sangame D155E181J |
| C11 | Capacitor, 47pF | C1074 | |
| C12 | Capacitor, .05μF | C0675 | Centralab UK-10-503 |
| C13 | Capacitor, .05μF | C0675 | Centralab UK-10-503 |
| C14 | Capacitor, .05μF | C0675 | Centralab UK-10-503 |
| C15 | Capacitor, .05μF | C0675 | Centralab UK-10-503 |
| C16 | Capacitor, .05μF | C0675 | Centralab UK-10-503 |
| C17 | Capacitor, .05μF | C0675 | Centralab UK-10-503 |
| C18 | Capacitor, .05μF | C0675 | Centralab UK-10-503 |
| C19 | Capacitor, .05μF | C0675 | Centralab UK-10-503 |
| C20 | Capacitor, 22pF | C1072 | |
| C21 | Capacitor, 470pF | C1078 | Sangamo D153E471J0 |
| C22 | Capacitor, 120μF | C6732 | Kemet K120-P10 |
| C23 | Capacitor, 10μF | C0510 | GE 62F20J |
| C24 | Capacitor, 10μF | C0510 | GE 62F20J |
| C25 | Capacitor, 120μF | C6732 | Kemet K120-P10 |
| C26 | Capacitor, .05μF | C0675 | Centralab UK-10-503 |
| C27 | Capacitor, .01μF | C0562 | Sprague TGS10 |
| C28 | Capacitor, .05μF | C0675 | Centralab UK-10-503 |
| C29 | Capacitor, .05μF | C0675 | Centralab UK-10-503 |
| C30 | Capacitor, .05μF | C0675 | Centralab UK-10-503 |
| C31 | Capacitor, .05μF | C0675 | Centralab UK-10-503 |
| C32 | Capacitor, .05μF | C0675 | Centralab UK-10-503 |
| C33 | Capacitor, .05μF | C0675 | Centralab UK-10-503 |
| C34 | Capacitor, 180pF, Dipmica | C1138 | Sangamo D155E181J |
| C35 | Capacitor, 47pF | C1074 | |

ACTO P.C. Board Parts List (con't.)

| Ref. | Description | SD Part No. | Manufacturers Part No. |
|---|---|---|---|
| C36 | Capacitor, .05μF | C0675 | Centralab D155E181J |
| C37 | Capacitor, 470pF | C1078 | Sangamo D153E471J0 |
| C38 | Capacitor, 150pF | C1076 | Sangamo D155E151J0 |
| C39 | Capacitor, .05μF | C0675 | Centralab D155E181J |
| C40 | Capacitor, .05μF | C0675 | Centralab D155E181J |
| C41 | Capacitor, .001μF | C0424 | RMC Type B |
| C42 | Capacitor, .01μF | C0562 | Sprague TGS10 |
| C43 | Capacitor, 100pF | C1075 | |
| C44 | Capacitor, 270pF, Dipmica | C1139 | Sangamo D115E271J |
| C45 | Capacitor, 100pF | C1075 | |
| C46 | Capacitor, 100pF | C1075 | |
| C47 | Capacitor, .01μF | C0562 | Sprague TGS10 |
| C48 | Capacitor, .01μF | C0562 | Sprague TGS10 |
| C49 | Capacitor, .01μF | C0562 | Sprague TGS10 |
| C50 | Capacitor, .01μF | C0675 | Centralab UK-10-503 |
| C51 | Capacitor, 180pF, Dipmica | C1138 | Sangamo D155E181J |
| C52 | Capacitor, 100pF, Mica | C1144 | Sangamo D151E1025 |
| C53 | Capacitor, .01μF | C0562 | Sprague TGS10 |
| C54 | Capacitor, 1000pF, Mica | C1144 | Sangamo D151E102J |
| C55 | Capacitor, .01μF | C0562 | Sprague TGS10 |
| C56 | Capacitor, 500pF | C1079 | |
| C57 | Capacitor, 33pF | C1073 | |
| C58 | Capacitor, 9-35pF, Trimmer | C0709 | |
| C59 | Capacitor, .05μF | C0675 | Centralab UK-10-503 |
| C60 | Capacitor, .001μF | C0424 | RMC Type B |
| C61 | Capacitor, 47pF | C1074 | |
| C62 | Capacitor, 12pF, Dipmica | C1141 | Sangamo D155C120J |
| C63 | Capacitor, 47pF | C1074 | |
| C64 | Capacitor, .001μF | C0424 | RMC Type B |
| C65 | Capacitor, .001μF | C0424 | RMC Type B |
| C66 | Capacitor, 100μF, 10V | C0369 | GE 62F301 |
| C67 | Capacitor, .05μF | C0675 | Centralab UK-10-503 |
| C68 | Capacitor, .05μF | C0675 | Centralab UK-10-503 |
| C69 | Capacitor, .01μF | C0562 | Sprague TGS10 |
| C70 | Capacitor, .001μF | C0424 | RMC Type B |
| C71 | Capacitor, .001μF | C0424 | RMC Type B |
| C72 | Capacitor, .33μF | C0239 | Electron M10334 |

ACTO P.C. Board Parts List (con't.)

| Ref. | Description | SD Part No. | Manufacturers Part No. |
|---|---|---|---|
| C73 | Capacitor, .01μF | C0562 | Sprague TGS10 |
| C74 | Capacitor, .05μF | C0675 | Centralab UK-10-503 |
| C75 | Capacitor, .05μF | C0675 | Centralab UK-10-503 |
| C76 | Capacitor, .001μF | C0424 | RMC Type B |
| C77 | Capacitor, .001μF | C0424 | RMC Type B |
| C78 | Capacitor, 22pF | C1072 | |
| C79 | Capacitor, .05μF | C0675 | Centralab UK-10-503 |
| C80 | Capacitor, .001μF | C0424 | RMC Type B |
| C81 | Capacitor, 22pF | C1074 | |
| C82 | Capacitor, 12pF, Dipmica | C1141 | Sangamo D155C120J |
| C83 | Capacitor, 15pF, Dipmica | C1142 | Sangamo D155C150J |
| C84 | Capacitor, .047μF, 100V Mylar | C0788 | Electron 2DE1-473 |
| C85 | Capacitor, .33μF, 100V | C0239 | Electron M1-334 |
| C86 | Capacitor, 318pF, 1%, 500V | C1155 | Sangamo D155E321F-31 |
| C87 | Not Used | | |
| C88 | Capacitor, 159pF, 1%, 500V | C1146 | Sangamo D155E161F |
| C89 | Capacitor, 1μF, 35V | C0524 | Sprague 150D105x9035A2 |
| C90 | Capacitor, .05μF | C0675 | Centralab UK-10-503 |
| C91 | Capacitor, .033μF, 100V | C1202 | Electron D1-330 |
| C92 | Capacitor, 1μF, 35V | C0524 | Sprague 150D105x9035A2 |
| C93 | Capacitor, 1μF, 35V | C0524 | Sprague 150D105x9035A2 |
| C94 | Capacitor, 1μF, 35V | C0524 | Sprague 150D105x9035A2 |
| C95 | Capacitor, 1μF, 35V | C0524 | Sprague 150D105x9035A2 |
| C96 | Capacitor, .05μF | C0675 | Centralab UK-10-503 |
| C97 | Capacitor, .01μF | C0562 | Sprague TGS10 |
| C98 | Capacitor, .05μF | C0675 | Centralab UK-10-503 |
| C99 | Capacitor, .001μF | C0424 | RMC Type B |
| C100 | Capacitor, 9-35pF, Trimmer | C0709 | Erie 530-011-E2 PO-94 |
| C101 | Capacitor, 56pF, mica, 25%, 500V | C0882 | Elmenco DM-15E-560H |
| C102 | Capacitor, 56pF, mica, 25%, 500V | C0882 | Elmenco DM-15E-560H |
| C103 | Capacitor, .001μF | C0424 | RMC Type B |
| C104 | Capacitor, .01μF | C0562 | Sprague TGS10 |
| C105 Thru C109 | Capacitor, .05μF | C0675 | Centralab UK-10-503 |
| C110 | Capacitor, .01μF | C0562 | Sprague TGS10 |
| C111 | Capacitor, .001μF | C0424 | RMC Type B |
| C112 | Capacitor, 5.5-18pF, Trimmer | C0712 | Erie 538-011-NPO-92R |

| Ref. | Description | SD Part No. | Manufacturers Part No. |
|---|---|---|---|
| C113 | Cxxx | Cxxx | |
| C114 | Capacitor, 18pF, Dipmica | C1143 | Sangamo D115C180J |
| C115 | Capacitor, 18pF, Dipmica | C1143 | Sangamo D115C180J |
| C116 | Capacitor, .001μF | C0424 | RMC Type B |
| C117 | Capacitor, .01μF | C0562 | Sprague TGS10 |
| C118 | Capacitor, .05μF | C0675 | Centralab UK-10-503 |
| C119 | Capacitor, .05μF | C0675 | Centralab UK-10-503 |
| C120 | Capacitor, .001μF | C0424 | RMC Type B |
| C121 | Capacitor, 33pF | C1073 | |
| C122 | Capacitor, .05μF | C0675 | Centralab UK-10-503 |
| C123 | Capacitor, .05μF | C0675 | Centralab UK-10-503 |
| C124 | Capacitor, .01μF | C0424 | Sprague TGS10 |
| C125 | Capacitor, .001μF | C0242 | RMC Type B |
| C126 | Capacitor, .01μF | C0562 | Sprague TGS10 |
| C127 | Capacitor, .01μF | C0562 | Sprague TGS10 |
| C128 | Capacitor, .05μF | C0675 | Centralab UK-10-503 |
| C129 | Capacitor, .05μF | C0675 | Centralab UK-10-503 |
| C130 | Capacitor, 159pF, 1%, 500V | C1146 | Sangamo D155E161F-159 |
| C131 | Capacitor, 100μF, 10V | C0369 | GE 62F301 |
| C132 | Capacitor, .05μF | C0675 | Centralab UK-10-503 |
| C133 | Capacitor, .05μF | C0675 | Centralab UK-10-503 |
| C134 | Capacitor, .05μF | C0675 | Centralab UK-10-503 |
| C135 | Capacitor, .05μF | C0675 | Centralab UK-10-503 |
| CR1 Thru | Diode, IN4151 | CR0150 | |
| CR14 | Same as CR1 | | |
| CR15 | Diode, MV1636, Motorola | CR0354 | |
| CR16 | Diode, MV1636, Motorola | CR0354 | |
| CR17 | Diode, MV1624, Motorola | CR0353 | |
| CR18 | Diode, IN4151 | CR0150 | |
| CR19 | Diode, IN4151 | CR0150 | |
| CR20 | Diode, IN4151 | CR0150 | |
| L1 | Choke, 100μH Wee-Wee 100 | L0156 | Nytronics Wee-Wee 100 |
| L2 | Choke, 100μH Wee-Wee 100 | L0156 | Nytronics Wee-Wee 100 |
| L3 | Choke, 470μH | L0019 | Stanwyck Dink 470 |
| L4 | Choke, 270μH | L0067 | Stanwyck Dink 270 |
| L5 | Choke, 1000μH | L0068 | Stanwyck Dink 1000 |

ACTO P.C. Board Parts List (con't.)

| Ref. | Description | SD Part No. | Manufacturers Part No. |
|---|---|---|---|
| L6 | Choke, 100μH Wee-Wee 100 | L0156 | Nytronics Wee-Wee 100 |
| L7 | Choke, 470μH | L0019 | Stanwyck Dink 470 |
| L8 | Choke, 100μH Wee-Wee 100 | L0156 | Nytronics Wee-Wee 100 |
| L9 | Choke, 470μH | L0067 | Stanwyck Dink 270 |
| L10 | Choke, 270μH | L0067 | Stanwyck Dink 270 |
| L11 | Choke, 100μH Wee-Wee 100 | L0156 | Nytronics Wee-Wee 100 |
| L12 | Choke, 470μH Wee-Wee 470 | L0019 | Nytronics Wee-Wee 470 |
| L13 | Choke, 47μH Wee-Wee 47 | L0152 | Nytronics Wee-Wee 47 |
| L14 | Inductor Assembly | 25072-1 | |
| L15 | Choke, 100μH, Wee-Wee 100 | L0156 | Nytronics Wee-Wee 100 |
| L16 | Choke, 100μH, Wee-Wee 100 | L0156 | Nytronics Wee-Wee 100 |
| L17 | Inductor Assembly | 25072-2 | |
| L18 | Choke, 10μH Wee-Wee 10 | L0153 | Nytronics Wee-Wee 10 |
| L19 | Choke, 10μH Wee-Wee 10 | L0153 | Nytronics Wee-Wee 10 |
| L20 | Choke, .47μH Wee-Wee 0.47 | L0154 | Nytronics Wee-Wee 0.47 |
| L21 | Choke, .15μH Wee-Wee 0.15 | L0155 | Nytronics Wee-Wee 0.15 |
| L22 | Choke, 10μH Wee-Wee 10 | L0153 | Nytronics Wee-Wee 10 |
| L23 | Choke, 10μH Wee-Wee 10 | L0153 | Nytronics Wee-Wee 10 |
| L24 | Choke, 100μH Wee-Wee 100 | L0156 | Nytronics Wee-Wee 100 |
| L25 | Choke, 100μH Wee-Wee 100 | L0156 | Nytronics Wee-Wee 100 |
| L26 | Choke, 100μH Wee-Wee 100 | L0156 | Nytronics Wee-Wee 100 |
| L27 | Choke, 470μH Wee-Wee 470 | L0157 | Nytronics Wee-Wee 470 |
| Thru | | | |
| L31 | Same as L27 | | |
| IC1 | Integrated Circuit SD19708 | 19708 | |
| Thru | | | |
| IC8 | Same as IC1 | | |
| IC9 | Integrated Circuit SD19716 | 19716 | |
| Thru | | | |
| IC13 | Same as IC9 | | |
| IC14 | Integrated Circuit SD19709 | 19709 | |
| IC15 | Not Used | | |
| IC16 | Integrated Circuit SD19716 | 19716 | |
| IC17 | Integrated Circuit SD19716 | 19716 | |
| IC18 | Integrated Circuit SD19716 | 19716 | |
| IC19 | Integrated Circuit SD19709 | 19709 | |
| IC20 | Not Used | | |
| IC21 | Integrated Circuit SD19711 | 19711 | |

ACTO P.C. Board Parts List (con't.)

| Ref. | Description | SD Part No. | Manufacturers Part No. |
|---|---|---|---|
| IC22 Thru IC24 | Integrated Circuit SD19716 | 19716 | |
| | Same as IC22 | | |
| IC25 | Integrated Circuit CA3028 | 25702 | |
| IC26 | Integrated Circuit CA3012 RCA | 25703 | |
| IC27 | Integrated Circuit CA3028 RCA | 25702 | |
| IC28 | Integrated Circuit CA3012 RCA | 25703 | |
| IC29 | Integrated Circuit CA3028 RCA | 25702 | |
| IC30 | Integrated Circuit CA3028 RCA | 25702 | |
| IC31 | Integrated Circuit CA3028 RCA | 25702 | |
| Q1 Thru Q4 | Transistor, 2N3646 | Q0218 | |
| | Same as Q1 | | |
| Q5 | Transistor, 2N4125 | Q0262 | |
| Q6 | Same as Q5 | | |
| Q7 Thru Q9 | Transistor, 2N3646 | Q0218 | |
| | Same as Q7 | | |
| Q10 | Transistor, 2N3640 | Q0178 | |
| Q11 | Transistor, 19420 | 19420 | |
| Q12 | Transistor, 19420 | 19420 | |
| Q13 | Transistor, 2N3646 | Q0218 | |
| Q14 | Transistor, 2N3640 | Q0178 | |
| Q15 | Transistor, 2N3640 | Q0178 | |
| Q16 | Transistor, 19420 | 19420 | |
| Q17 | Transistor, 19420 | 19420 | |
| Q18 Thru Q20 | Transistor, 2N4125 | Q0262 | |
| | Same as Q18 | | |
| Q21 | Transistor, 2N3643 | Q0179 | |
| Q22 | Transistor, MPF 105 Motorola | Q0264 | |
| Q23 | Transistor, 2N3643 | Q0179 | |
| Q24 | Transistor, 2N4342 | Q0243 | |
| Q25 Thru Q27 | Transistor, 2N3643 | Q0179 | |
| | Same as Q25 | | |
| Q28 | Transistor, 19420 | 19420 | |
| Q29 | Transistor, 2N3640 | Q0178 | |

ACTO P.C. Board Parts List (con't.)

| Ref. | Description | SD Part No. | Manufacturers Part No. |
|---|---|---|---|
| Q30 | Transistor, 2N3646 | Q0218 | |
| R1 | Resistor, 3.3k, 1/4W, 5% | R0742 | Allen Bradley CB3325 |
| R2 | Resistor, 10k, 1/4W, 5% | R0766 | Allen Bradley CB1035 |
| R3 | Resistor, 1k, 1/4W, 5% | R0765 | Allen Bradley CB1025 |
| R4 | Resistor, 1k, 1/4W, 5% | R0765 | Allen Bradley CB1025 |
| R5 | Resistor, 5k, POT | R1858 | Spectrol 80-3-4-502 |
| R6 | Resistor, 150k, 1/4W, 5% | R0961 | Allen Bradley CB1535 |
| R7 | Resistor, 1k, 1/4W, 5% | R0765 | Allen Bradley CB1025 |
| R8 | Resistor, 390Ω, 1/4W, 5% | R0880 | Allen Bradley CB3915 |
| R9 | Resistor, 2.2k, 1/4W, 5% | R0749 | Allen Bradley CB2225 |
| R10 | Resistor, 4.7k, 1/4W, 5% | R0892 | Allen Bradley CB4725 |
| R11 | Resistor, 4.7k, 1/4W, 5% | R0892 | Allen Bradley CB4725 |
| R12 | Resistor, 3.3k, 1/4W, 5% | R0742 | Allen Bradley CB3325 |
| R13 | Resistor, 8.2k, 1/4W, 5% | R0883 | Allen Bradley CB8225 |
| R14 | Resistor, 680Ω, 1/4W, 5% | R1234 | Allen Bradley CB6815 |
| R15 | Resistor, 3.3k, 1/4W, 5% | R0742 | Allen Bradley CB3325 |
| R16 | Resistor, 390Ω, 1/4W, 5% | R0880 | Allen Bradley CB3915 |
| R17 | Resistor, 4.7k, 1/4W, 5% | R0892 | Allen Bradley CB4725 |
| R18 | Resistor, 56k, 1/4W, 5% | R1235 | Allen Bradley CB5625 |
| R19 | Resistor, 390Ω, 1/4W, 5% | R0880 | Allen Bradley CB3915 |
| R20 | Resistor, 1k, 1/4W, 5% | R0765 | Allen Bradley CB1025 |
| R21 | Resistor, 12k, 1/4W, 5% | R0759 | Allen Bradley CB1225 |
| R22 | Resistor, 150k, 1/4W, 5% | R0961 | Allen Bradley CB1535 |
| R23 | Resistor, POT 5k | R1858 | Spectrol 80-3-4-502 |
| R24 | Resistor, 1k, 1/4W, 5% | R0765 | Allen Bradley CB1025 |
| R25 | Resistor, 1k, 1/4W, 5% | R0765 | Allen Bradley CB1025 |
| R26 | Resistor, 2.7k, 1/4W, 5% | R0937 | Allen Bradley CB2725 |
| R27 | Resistor, 68Ω, 1/4W, 5% | R1426 | Allen Bradley CB6805 |
| R28 | Resistor, 4.7k, 1/4W, 5% | R0892 | Allen Bradley CB4725 |
| R29 | Resistor, 4.7k, 1/4W, 5% | R0892 | Allen Bradley CB4725 |
| R30 | Resistor, 6.8k, 1/4W, 5% | R0696 | Allen Bradley CB6825 |
| R31 | Resistor, 6.8k, 1/4W, 5% | R0696 | Allen Bradley CB6825 |
| R32 | Resistor, 1k, 1/4W, 5% | R0765 | Allen Bradley CB1025 |
| R33 | Resistor, 2.7k, 1/4W, 5% | R0937 | Allen Bradley CB2725 |
| R34 | Resistor, 390Ω, 1/4W, 5% | R0880 | Allen Bradley CB2915 |
| R35 | Resistor, 3.3k, 1/4W, 5% | R0742 | Allen Bradley CB3325 |
| R36 | Resistor, 470Ω, 1/4W, 5% | R1044 | Allen Bradley CB4715 |

ACTO P.C. Board Parts List (con't.)

| Ref. | Description | SD Part No. | Manufacturers Part No. |
|---|---|---|---|
| R37 | Resistor, 1.2k, 1/4W, 5% | R0809 | Allen Bradley CB1225 |
| R38 | Resistor, 100Ω, 1/4W, 5% | R0966 | Allen Bradley CB1025 |
| R39 | Resistor, 300Ω, 1/4W, 5% | R0670 | Allen Bradley CB3025 |
| R40 | Resistor, 300Ω, 1/4W, 5% | R0670 | Allen Bradley CB3025 |
| R41 | Resistor, 180Ω, 1/4W, 5% | R1233 | Allen Bradley CB1815 |
| R42 | Resistor, 2.7k, 1/4W, 5% | R0937 | Allen Bradley CB2725 |
| R43 | Resistor, 2.7k, 1/4W, 5% | R0937 | Allen Bradley CB2725 |
| R44 | Resistor, 4.7k, 1/4W, 5% | R0892 | Allen Bradley CB4725 |
| R45 | Resistor, 10Ω, 1/4W, 5% | R0739 | Allen Bradley CB1015 |
| R46 | Resistor, 1k, 1/4W, 5% | R0765 | Allen Bradley CB1025 |
| R47 | Resistor, 100Ω, 1/4W, 5% | R0966 | Allen Bradley CB1025 |
| R48 | Resistor, 1k, 1/4W, 5% | R0765 | Allen Bradley CB1025 |
| R49 | Resistor, 4.7k, 1/4W, 5% | R0892 | Allen Bradley CB4725 |
| R50 | Resistor, 1k, 1/4W, 5% | R0875 | Allen Bradley CB1025 |
| R51 | Resistor, 51Ω, 1/4W, 5% | R1246 | Allen Bradley CB5105 |
| R52 | Resistor, 47Ω, 1/4W, 5% | R0743 | Allen Bradley CB4705 |
| R53 | Resistor, 1k, 1/4W, 5% | R0765 | Allen Bradley CB1025 |
| R54 | Resistor, 100Ω, 1/4W, 5% | R0966 | Allen Bradley CB1025 |
| R55 | Resistor, 3.3k, 1/4W, 5% | R0742 | Allen Bradley CB3325 |
| R56 | Resistor, 39Ω, 1/4W, 5% | R1552 | Allen Bradley CB3905 |
| R57 | Resistor, 47Ω, 1/4W, 5% | R0743 | Allen Bradley CB4705 |
| R58 | Resistor, 10Ω, 1/4W, 5% | R0739 | Allen Bradley CB1015 |
| R59 | Resistor, 47Ω, 1/4W, 5% | R0743 | Allen Bradley CB4705 |
| R60 | Resistor, 51Ω, 1/4W, 5% | R1246 | Allen Bradley CB5105 |
| R61 | Resistor, 2.2k, 1/4W, 5% | R0749 | Allen Bradley CB2225 |
| R62 | Resistor, 1.5k, 1/4W, 5% | R0783 | Allen Bradley CB1525 |
| R63 | Resistor, 1k, 1/4W, 5% | R0765 | Allen Bradley CB1025 |
| R64 | Resistor, 2.7k, 1/4W, 5% | R0937 | Allen Bradley CB2725 |
| R65 | Resistor, 4.7k, 1/4W, 5% | R0892 | Allen Bradley CB4725 |
| R66 | Resistor, 10k, 1/4W, 5% | R0766 | Allen Bradley CB1035 |
| R67 | Resistor, 33k, 1/4W, 5% | R0780 | Allen Bradley CB3325 |
| R68 | Resistor, 2.2k, 1/4W, 5% | R0749 | Allen Bradley CB2225 |
| R69 | Resistor, 22k, 1/4W, 5% | R0768 | Allen Bradley CB2225 |
| R70 | Resistor, 150Ω, 1/4W, 5% | R0983 | Allen Bradley CB1515 |
| R71 | Resistor, 150Ω, 1/4W, 5% | R0983 | Allen Bradley CB1515 |
| R72 | Resistor, 470Ω, 1/4W, 5% | R1044 | Allen Bradley CB4715 |
| R73 | Resistor, 150k, 1/4W, 5% | R0961 | Allen Bradley CB1535 |
| R74 | Resistor, 10k, 1/4W, 5% | R0766 | Allen Bradley CB1035 |

| Ref. | Description | SD Part No. | Manufacturers Part No. |
|---|---|---|---|
| R75 | Resistor, 10k, 1/4W, 5% | R0766 | Allen Bradley CB1035 |
| R76 | Resistor, 1 Meg., 1/4W, 5% | R0962 | Allen Bradley CB1005 |
| R78 | Resistor, 15k, 1/4W, 5% | R0728 | Allen Bradley CB1525 |
| R79 | Resistor, 1 Meg. 1/8W, 1% | R2371 | Electra MF5C-D-100rF |
| R80 | Resistor, 499k, 1/8W, 1% | R2372 | Electra MF5C-D-4993-F |
| R81 | Resistor, 5.6k, 1/4W, 5% | R0821 | Allen Bradley CB5625 |
| R82 | Resistor, 820Ω, 1/4W, 5% | R0762 | Allen Bradley CB8215 |
| R83 | Resistor, 820Ω, 1/4W, 5% | R0762 | Allen Bradley CB8215 |
| R84 | Resistor, 4.7k, 1/4W, 5% | R0892 | Allen Bradley CB4725 |
| R85 | Resistor, 12k, 1/4W, 5% | R0759 | Allen Bradley CB1225 |
| R86 | Resistor, 10k, 1/4W, 5% | R0766 | Allen Bradley CB1035 |
| R87 | Resistor, 820Ω, 1/4W, 5% | R0762 | Allen Bradley CB8215 |
| R88 | Resistor, 10k, 1/4W, 5% | R0766 | Allen Bradley CB1035 |
| R89 | Resistor, 3.3k, 1/4W, 5% | R0742 | Allen Bradley CB3325 |
| R90 | Resistor, 820Ω, 1/4W, 5% | R0762 | Allen Bradley CB8215 |
| R91 | Resistor, 1k, 1/4W, 5% | R0765 | Allen Bradley CB1025 |
| R92 | Resistor, 150Ω, 1/4W, 5% | R0983 | Allen Bradley CB1515 |
| R93 | Resistor, 51Ω, 1/4W, 5% | R1246 | Allen Bradley CB5105 |
| R94 | Resistor, 150Ω, 1/4W, 5% | R0983 | Allen Bradley CB1515 |
| R95 | Resistor, 100Ω, 1/4W, 5% | R0966 | Allen Bradley CB1025 |
| R96 | Resistor, 100Ω, 1/4W, 5% | R0966 | Allen Bradley CB1025 |
| R97 | Resistor, 51Ω, 1/4W, 5% | R1246 | Allen Bradley CB5105 |
| R98 | Resistor, 150Ω, 1/4W, 5% | R0983 | Allen Bradley CB1515 |
| R99 | Resistor, 150Ω, 1/4W, 5% | R0983 | Allen Bradley CB1515 |
| R100 | Resistor, 1k, 1/4W, 5% | R0765 | Allen Bradley CB1025 |
| R101 | Resistor, 1k, 1/4W, 5% | R0765 | Allen Bradley CB1025 |
| R102 | Resistor, 150Ω, 1/4W, 5% | R0083 | Allen Bradley CB1515 |
| R103 | Resistor, 51Ω, 1/4W, 5% | R1246 | Allen Bradley CB5105 |
| R104 | Resistor, 150Ω, 1/4W, 5% | R0983 | Allen Bradley CB1515 |
| R105 | Resistor, 100Ω, 1/4W, 5% | R0966 | Allen Bradley CB1025 |
| R106 | Resistor, 100Ω, 1/4W, 5% | R0966 | Allen Bradley CB1025 |
| R107 | Resistor, 51Ω, 1/4W, 5% | R1246 | Allen Bradley CB5105 |
| R108 | Resistor, 150Ω, 1/4W, 5% | R0983 | Allen Bradley CB1515 |
| R109 | Resistor, 150Ω, 1/4W, 5% | R0983 | Allen Bradley CB1515 |
| R110 | Resistor, 1k, 1/4W, 5% | R0765 | Allen Bradley CB1025 |
| R111 | Resistor, 1k, 1/4W, 5% | R0765 | Allen Bradley CB1025 |
| R112 | Resistor, 820Ω, 1/4W, 5% | R0762 | Allen Bradley CB8215 |
| R113 | Resistor, 1k, 1/4W, 5% | R0765 | Allen Bradley CB1025 |

ACTO P.C. Board Parts List (con't.)

| Ref. | Description | SD Part No. | Manufacturers Part No. |
|---|---|---|---|
| R114 | Resistor, 100Ω, 1/4W, 5% | R0966 | Allen Bradley CB1025 |
| R115 | Resistor, 22Ω, 1/4W, 5% | R1436 | Allen Bradley CB2205 |
| R116 | Resistor, 3.3k, 1/4W, 5% | R0742 | Allen Bradley CB3325 |
| R117 | Resistor, 1k, 1/4W, 5% | R0765 | Allen Bradley CB1025 |
| R118 | Resistor, 100Ω, 1/4W, 5% | R0966 | Allen Bradley CB1025 |
| R119 | Resistor, 100Ω, 1/4W, 5% | R0966 | Allen Bradley CB1025 |
| R120 | Resistor, 1k, 1/8W, 5% | R1453 | Allen Bradley BB1025 |
| T1 | Transformer, phase detector | 25701 | |
| T2 | Transformer, phase detector | 25701 | |
| T3 | Transformer, phase detector | 25701 | |
| T4 | Transformer, wideband | 25067 | |
| T5 | Transformer, wideband | 25067 | |
| T6 | Transformer, wideband | 25067 | |
| T7 | Transformer, wideband | 25067 | |
| T8 | Transformer, Assembly | 25072-3 | |
| T9 | Transformer, Assembly | 25072-4 | |
| T10 | Transformer, wideband | 25067 | |
| | Terminal | E0100 | USEC02000B |
| TP1 | Test Point, Brown | E0284 | |
| TP2 | Test Point, Red | C0279 | |
| TP3 | Test Point, Orange | E0282 | |
| TP4 | Test Point, Yellow | E0283 | |
| TP5 | Test Point, Blue | E0281 | |
| TP6 | Test Point, Green | E0285 | |

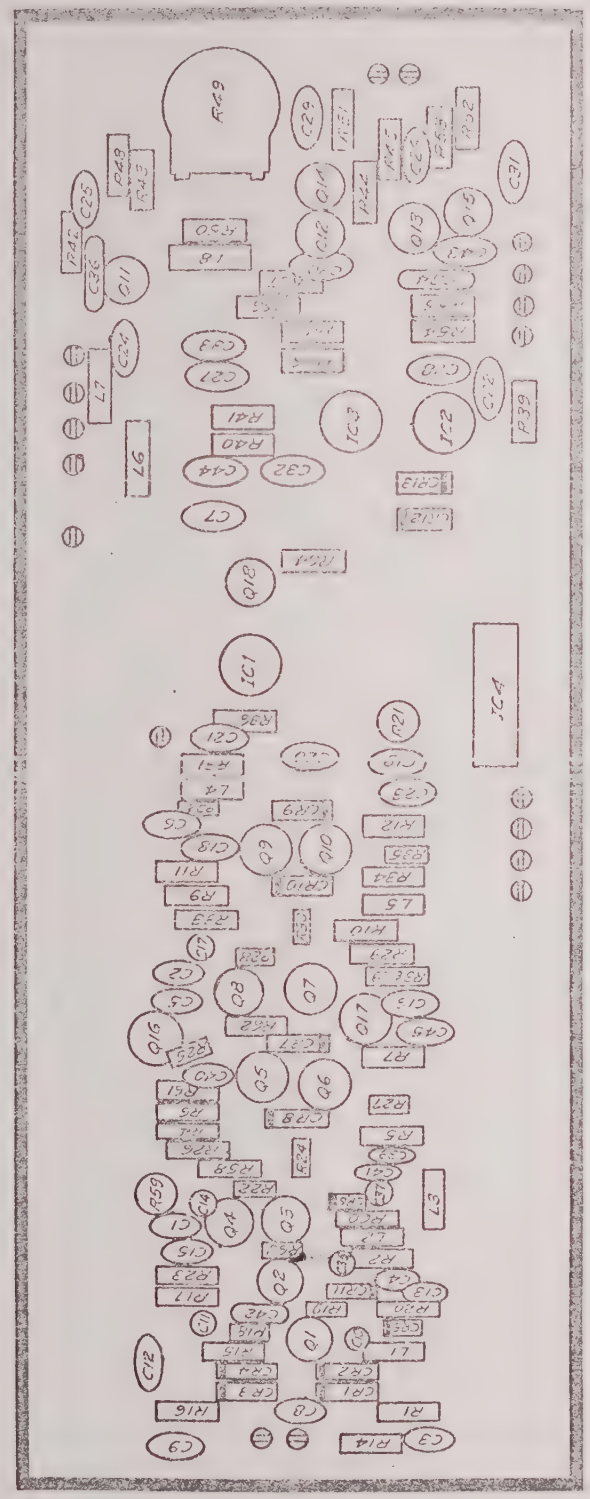

Figure 6-12. 300 MHz Prescaler [25189C]

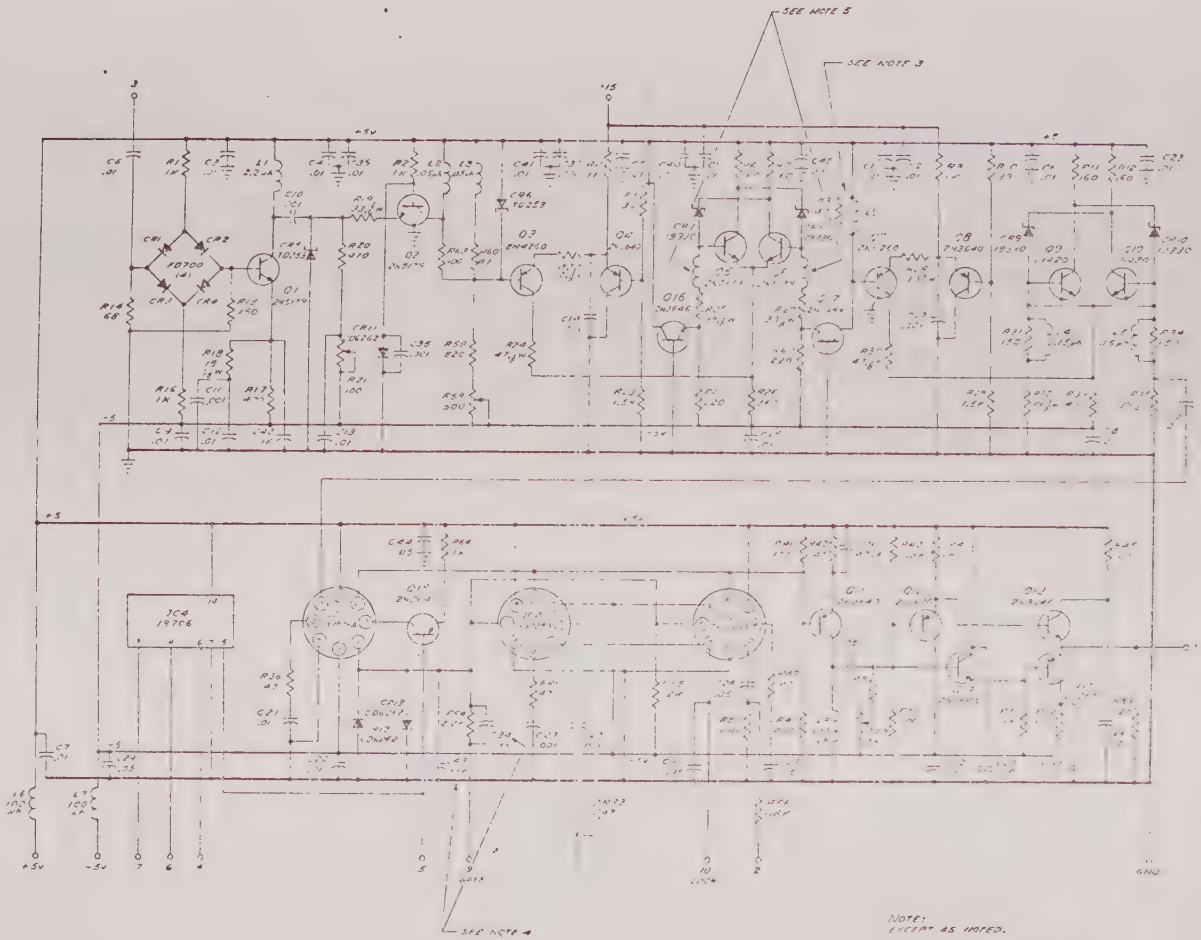


Figure 6-13. Schematic 300 MHz Prescaler [25186]

300 MHz Prescaler Parts List

| Ref. | Description | SD Part No. | Manufacturers Part No. |
|---|---|---|---|
| | 300 MHz Prescaler P.C. Assembly | 25189 | |
| C1 | Capacitor, .01μF, 150V, Disc. | C0233 | Centralab DDM103 |
| Thru | | | |
| C9 | Same as C1 | | |
| C10 | Capacitor, .001μF, 750 Min-M-001M | C1155 | Gulton Min-M-001M |
| C11 | Capacitor, .001μF, 750 Min-M-001M | C1155 | Gulton Min-M-001M |
| C12 | Capacitor, .01μF, 150V, Disc. | C0233 | Centralab DDM103 |
| C13 | Capacitor, .01μF, 150V, Disc. | C0233 | Centralab DDM103 |
| C14 | Capacitor, .001μF, 750 Min-M-001M | C1155 | Gulton Min-M-001M |
| C15 | Capacitor, .01μF, 150V, Disc. | C0233 | Centralab DDM103 |
| C16 | Capacitor, .01μF, 150V, Disc. | C0233 | Centralab DDM103 |
| C17 | Capacitor, .001μF, 750 Min-M-001M | C1155 | Gulton Min-M-001M |
| C18 | Capacitor, 150V, Disc. | C0233 | Centralab DDM103 |
| Thru | | | |
| C21 | Same as C18 | | |
| C22 | Capacitor, .001μF | C0424 | RMC Type B |
| C23 | Capacitor, .01μF, 150V, Disc. | C0233 | Centralab DDM103 |
| C24 | Capacitor, .05μF | C0672 | RMC Type M-12 |
| C25 | Capacitor, .01μF, 150V, Disc. | C0233 | Centralab DDM103 |
| C26 | Capacitor, .05μF | C0672 | RMC Type M-12 |
| C27 | Capacitor, .001μF | C0424 | RMC Type M-12 |
| C28 | Capacitor, .05μF | C0672 | RMC Type M-12 |
| Thru | | | |
| C33 | Same as C28 | | |
| C34 | Capacitor, (Determined at Checkout) | | |
| C35 | Capacitor, .001μF, 75V, Min-M-001M | C1155 | Gulton Min-M-001M |
| C36 | Capacitor, 47pF | C1074 | |
| C37 | Capacitor, .001μF, 75V, Min-M-001M | C1155 | Gulton Min-M-001M |
| C38 | Not Used | | |
| C39 | Capacitor, .01μF, 150V, Disc. | C0233 | Centralab DDM103 |
| C40 | Capacitor, .01μF, 150V, Disc. | C0233 | Centralab DDM103 |
| C41 | Capacitor, .01μF, 150V, Disc. | C0233 | Centralab DDM103 |
| C42 | Capacitor, 18pF | C1143 | Sangamo D155C180J |
| C43 | Capacitor, (Determined at Checkout) | | |
| C44 | Capacitor, .05μF | C0672 | RMC Type M-12 |
| C45 | Capacitor, .01μF, 150V, Disc. | C0233 | Centralab DDM103 |
| CR1 | Diode, FD700 | CR0356 | Fairchild |

| Ref. | Description | SD Part No. | Manufacturers Part No. |
|---|---|---|---|
| CR2 | Diode, FD700 | CR0356 | Fairchild |
| CR3 | Diode, FD700 | CR0356 | Fairchild |
| CR4 | Diode, FD700 | CR0356 | Fairchild |
| CR5 | Diode TD253 | S25287 | |
| CR6 | Diode TD253 | S25287 | |
| CR7 Thru CR10 | Diode, 19330<br>Same as CR7 | 19330 | |
| CR11 | Diode, 6262 | CR0150 | |
| CR12 | Diode, 6262 | CR0150 | |
| CR13 | Diode, 6262 | CR0150 | |
| IC1 | Integrated Circuit, CA3028A | 25702 | |
| IC2 | Integrated Circuit, CA3028A | 25702 | |
| IC3 | Integrated Circuit, CA3028A | 25702 | |
| IC4 | Integrated Circuit, 4710 | 19706 | |
| L1 | Choke, 2.2μH Wee-Wee | L0078 | Nytronics Wee-Wee 2.2 |
| L2 | Choke | L0159 | Jeffers .05 H 10150-17 |
| L3 | Choke | L0159 | Jeffers .05 H 10150-17 |
| L4 | Choke, 0.15μH | L0080 | Stanwyck 1A1503M |
| L5 | Choke, 0.15μH | L0080 | Stanwyck 1A1503M |
| L6 | Choke, 100μH | L0073 | Stanwyck Dink 100 |
| L7 | Choke, 100μH | L0073 | Stanwyck Dink 100 |
| L8 | Choke, 100μH | L0073 | Stanwyck Dink 100 |
| Q1 | Transistor, 2N5179 | Q0269 | |
| Q2 | Transistor, 2N5179 | Q0269 | |
| Q3 | Transistor, 2N4269 | Q0272 | |
| Q4 | Transistor, 2N3640 | Q0178 | |
| Q5 | Transistor, 2N5179 | Q0269 | |
| Q6 Thru Q8 | Transistor, 2N5179<br>Same as Q6 | Q0269 | |
| Q9 | Transistor, 19420 | 19420 | |
| Q10 | Transistor, 19420 | 19420 | |
| Q11 | Transistor, 2N3640 | Q0178 | |
| Q12 | Transistor, 2N3640 | Q0178 | |
| Q13 | Transistor, 2N3646 | Q0218 | |
| Q14 | Transistor, 2N3646 | Q0218 | |

300 MHz Prescaler Parts List (con't.)

| Ref. | Description | SD Part No. | Manufacturers Part No. |
|---|---|---|---|
| Q15 | Transistor, 2N3640 | Q0178 | |
| Q16 | Transistor, 2N3646 | Q0218 | |
| Q17 | Transistor, 2N3646 | Q0218 | |
| Q18 | Transistor, 2N3640 | Q0178 | |
| R1 | Resistor, 1k, 1/4W, 5% | R0765 | Allen Bradley CB1025 |
| R2 | Resistor, 1k, 1/4W, 5% | R0765 | Allen Bradley CB1025 |
| R3 | Resistor, 470Ω, 1/4W, 5% | R0743 | Allen Bradley CB4705 |
| R4 | Resistor, 1k, 1/4W, 5% | R0765 | Allen Bradley CB1025 |
| R5 | Resistor, 39Ω, 1/4W, 5% | R1552 | Allen Bradley CB3905 |
| R6 | Resistor, 160Ω, 1/4W, 5% | R1572 | Allen Bradley CB1615 |
| R7 | Resistor, 160Ω, 1/4W, 5% | R1572 | Allen Bradley CB1615 |
| R8 | Not Used | | |
| R9 | Resistor, 1k, 1/4W, 5% | R0765 | Allen Bradley CB1025 |
| R10 | Resistor, 39Ω, 1/4W, 5% | R1552 | Allen Bradley CB3905 |
| R11 | Resistor, 160Ω, 1/4W, 5% | R1572 | Allen Bradley CB1615 |
| R12 | Resistor, 160Ω, 1/4W, 5% | R1572 | Allen Bradley CB1615 |
| R13 | Not Used | | |
| R14 | Resistor, 68Ω, 1/4W, 5% | R1426 | Allen Bradley CB6805 |
| R15 | Resistor, 150Ω, 1/4W, 5% | R0983 | Allen Bradley CB1515 |
| R16 | Resistor, 1k, 1/4W, 5% | R0765 | Allen Bradley CB1025 |
| R17 | Resistor, 470Ω, 1/4W, 5% | R1044 | Allen Bradley CB7415 |
| R18 | Resistor, 18Ω, 1/8W, 5% | R1822 | Allen Bradley BB1805 |
| R19 | Resistor, 33Ω, 1/8W, 5% | R1827 | Allen Bradley BB3305 |
| R20 | Resistor, 470Ω, 1/4W, 5% | R1044 | Allen Bradley CB4715 |
| R21 | Resistor, POT, 100 | R2374 | Beckman Hiltrim 62PR100 |
| R22 | Resistor, 12Ω, 1/8W, 5% | R1840 | Allen Bradley BB1205 |
| R23 | Resistor, 1.5k, 1/4W, 5% | R0783 | Allen Bradley CB1525 |
| R24 | Resistor, 47Ω, 1/8W, 5% | R1449 | Allen Bradley BB4705 |
| R25 | Resistor, 39Ω, 1/8W, 5% | R1829 | Allen Bradley BB3905 |
| R26 | Resistor, 360Ω, 1/4W, 5% | R1571 | Allen Bradley CB3615 |
| R27 | Resistor, 39Ω, 1/8W, 5% | R1829 | Allen Bradley BB3905 |
| R28 | Resistor, 1.5k, 1/4W, 5% | R0783 | Allen Bradley CB1525 |
| R30 | Resistor, 47Ω, 1/8W, 5% | R1449 | Allen Bradley BB4705 |
| R31 | Resistor, 150Ω, 1/4W, 5% | R0983 | Allen Bradley CB1515 |
| R32 | Resistor, 39Ω, 1/8W, 5% | R1829 | Allen Bradley BB3905 |
| R33 | Resistor, 430Ω, 1/4W, 5% | R1667 | Allen Bradley CB4315 |
| R34 | Resistor, 150Ω, 1/4W, 5% | R0983 | Allen Bradley CB1515 |
| R35 | Resistor, 39Ω, 1/8W, 5% | R1829 | Allen Bradley BB3905 |

300 MHz Prescaler Parts List (con't.)

| Ref. | Description | SD Part No. | Manufacturers Part No. |
|---|---|---|---|
| R36 | Resistor, 47Ω, 1/4W, 5% | R0743 | Allen Bradley CB4705 |
| R37 | Not Used | | |
| R38 | Not Used | | |
| R39 | Resistor, 47Ω, 1/4W, 5% | R0743 | Allen Bradley CB4705 |
| R40 | Resistor, 100Ω, 1/4W, 5% | R0966 | Allen Bradley CB1025 |
| R41 | Resistor, 470Ω, 1/4W, 5% | R1044 | Allen Bradley CB4715 |
| R42 | Resistor, 47Ω, 1/4W, 5% | R0743 | Allen Bradley CB4705 |
| R43 | Resistor, 3.3k, 1/4W, 5% | R0742 | Allen Bradley CB3325 |
| R44 | Resistor, 1k, 1/4W, 5% | R0765 | Allen Bradley CB1025 |
| R45 | Resistor, 100Ω, 1/4W, 5% | R0966 | Allen Bradley CB1025 |
| R46 | Resistor, 47Ω, 1/4W, 5% | R0743 | Allen Bradley CB4705 |
| R47 | Resistor, 47Ω, 1/4W, 5% | R0743 | Allen Bradley CB4705 |
| R48 | Resistor, 1k, 1/4W, 5% | R0765 | Allen Bradley CB1025 |
| R49 | Resistor, POT, 2k | R2307 | Mallory MTC-23L4 |
| R50 | Resistor, 100Ω, 1/4W, 5% | R0966 | Allen Bradley CB1025 |
| R51 | Resistor, 1k, 1/4W, 5% | R0743 | Allen Bradley CB1025 |
| R52 | Resistor, 100Ω, 1/4W, 5% | R0966 | Allen Bradley CB1025 |
| R53 | Resistor, 120Ω, 1/4W, 5% | R1461 | Allen Bradley CB1215 |
| R54 | Resistor, 2.2k, 1/4W, 5% | R0749 | Allen Bradley CB2225 |
| R55 | Resistor, 12k, 1/4W, 5% | R0749 | Allen Bradley CB1225 |
| R56 | Resistor, 1.8, 1/4W, 5% | R0959 | Allen Bradley CB1825 |
| R57 | Resistor, 100Ω, 1/4W, 5% | R0966 | Allen Bradley CB1025 |
| R58 | Resistor, 820Ω, 1/4W, 5% | R0762 | Allen Bradley CB8215 |
| R59 | Resistor, POT, 500 | R2375 | Beckman Hiltrim 62PR500 |
| R60 | Resistor, 47Ω, 1/4W, 5% | R0743 | Allen Bradley CB4705 |
| R61 | Resistor, 220Ω, 1/4W, 5% | R0760 | Allen Bradley CB2215 |
| R62 | Resistor, 220Ω, 1/4W, 5% | R0760 | Allen Bradley CB2215 |
| R63 | Resistor, 100Ω, 1/8W, 5% | R1441 | Allen Bradley BB1025 |
| R64 | Resistor, 1k, 1/4W, 5% | R0743 | Allen Bradley CB1025 |

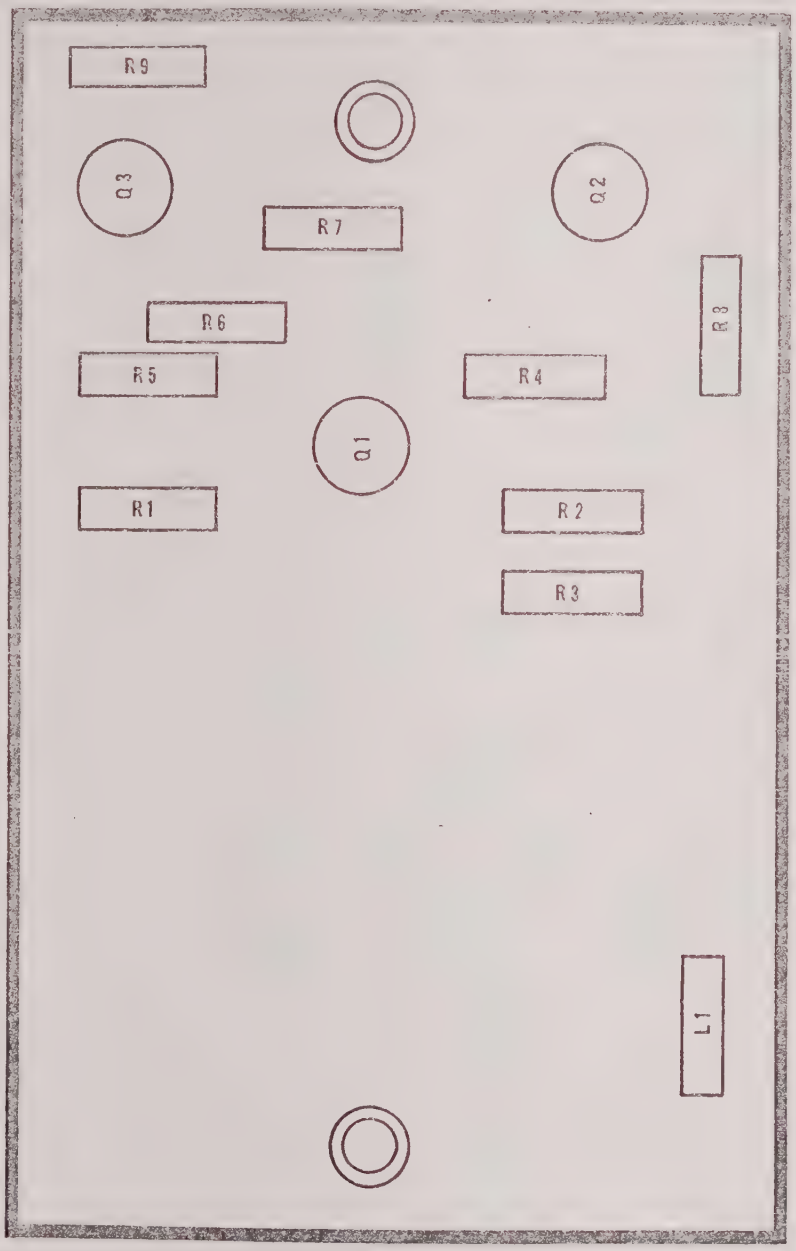


Figure 6-14. 1 MHz (Shaped) Assembly [19943D]

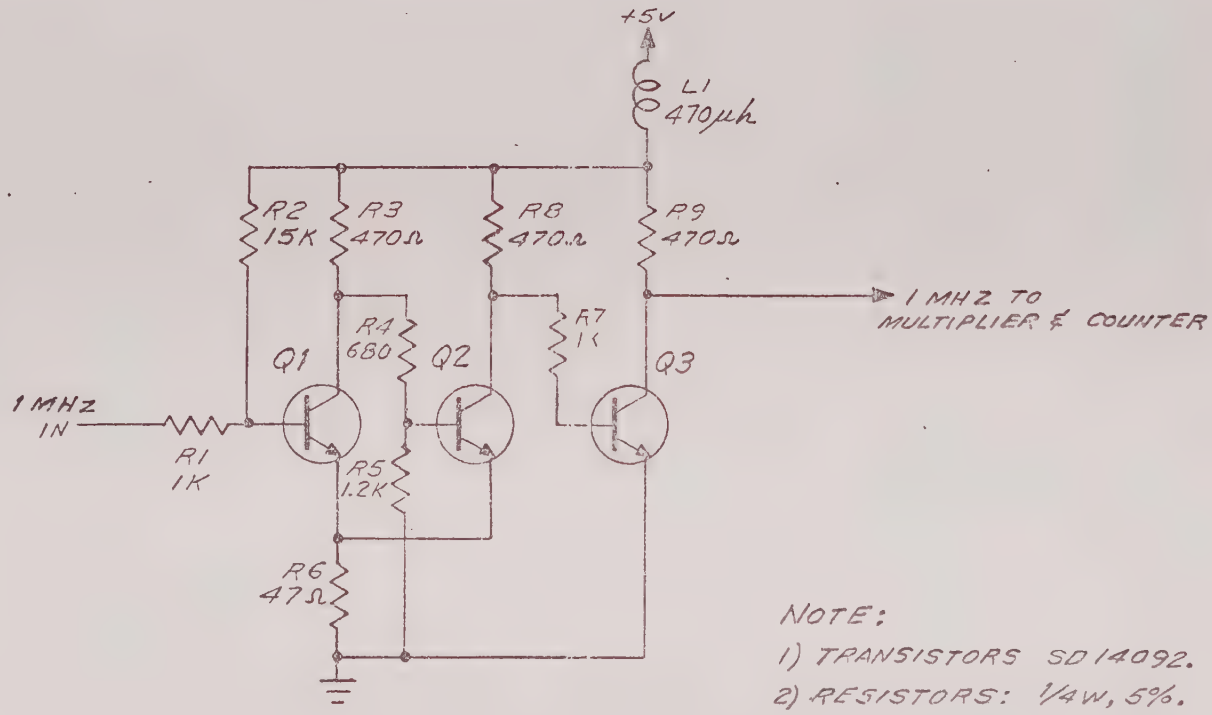


Figure 6-15. Schematic 1 MHz (Shaped) Assembly [23388]

1 MHz P.C. Assembly Parts List

| Ref. | Description | SD Part No. | Manufacturers Part No. |
|---|---|---|---|
| | 1 MHz P.C. Assembly | 19943 | |
| R1 | Resistor, 1k, 1/4W, 5% | R0765 | Allen Bradley CB1025 |
| R2 | Resistor, 15k, 1/4W, 5% | R0728 | Allen Bradley CB1525 |
| R3 | Resistor, 470Ω, 1/4W, 5% | R1044 | Allen Bradley CB4715 |
| R4 | Resistor, 680Ω, 1/4W, 5% | R1234 | Allen Bradley CB6815 |
| R5 | Resistor, 1.2k, 1/4W, 5% | R0809 | Allen Bradley CB1225 |
| R6 | Resistor, 47Ω, 1/4W, 5% | R0743 | Allen Bradley CB4705 |
| R7 | Resistor, 1k, 1/4W, 5% | R0765 | Allen Bradley CB1025 |
| R8 | Resistor, 470Ω, 1/4W, 5% | R1044 | Allen Bradley CB4715 |
| R9 | Resistor, 470Ω, 1/4W, 5% | R1044 | Allen Bradley CB4715 |
| Q1 Thru Q3 | Transistor, 14092 | 14092 | |
| | Same as Q1 | | |
| L1 | Choke, 470μH | L0019 | Stanwyck Dink 470 |

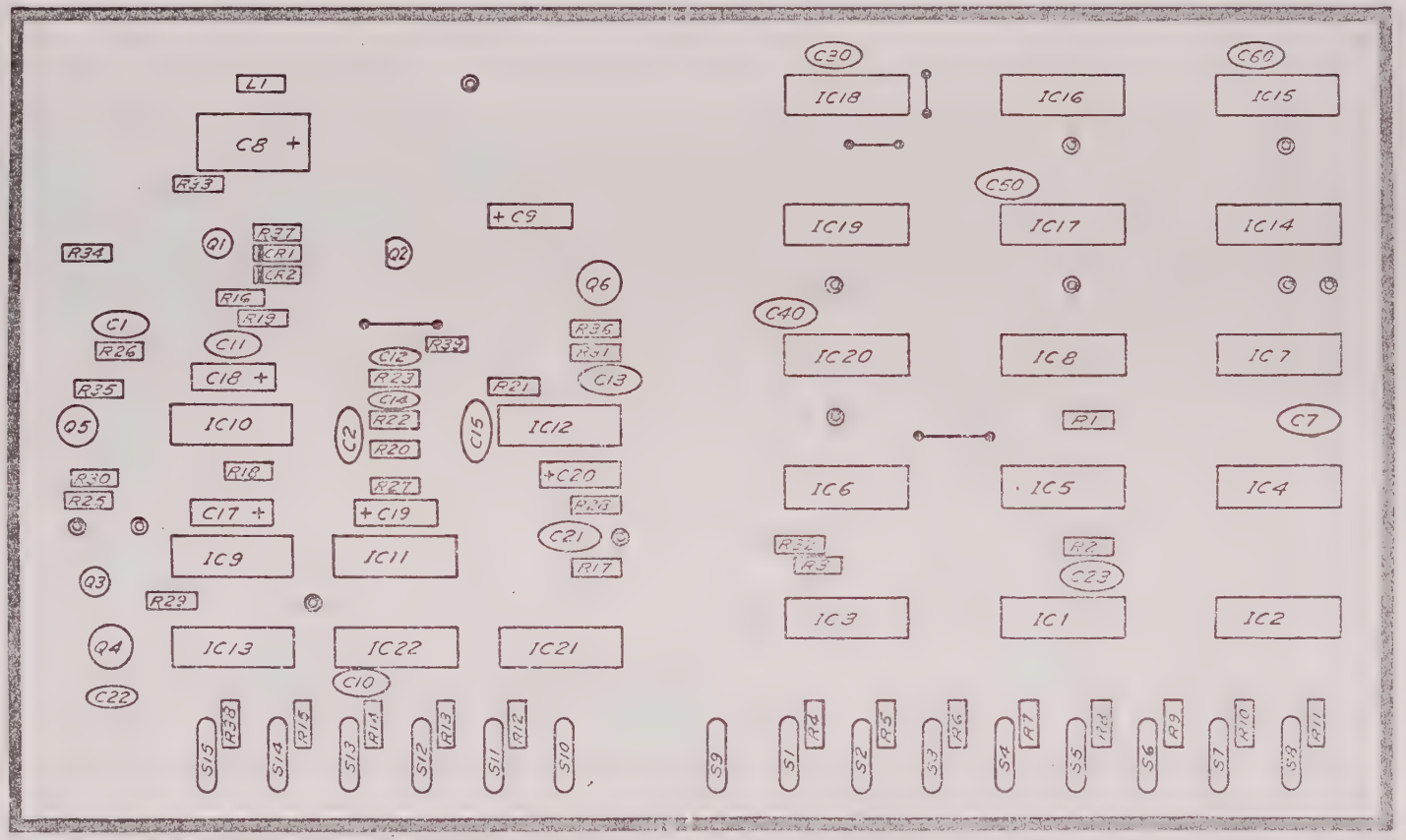


Figure 6-16. Frequency Function [19941C]

Frequency Function Parts List

| Ref. | Description | SD Part No. | Manufacturers Part No. |
|---|---|---|---|
| | Frequency Function P.C. Assy | 19941 | |
| C1 | Capacitor, 0.05μF, 12V | C0672 | RMC Type M-12 |
| Thru | | | |
| C7 | Same as C1 | | |
| C8 | Capacitor, 60μF, 50V | C0783 | |
| C9 | Capacitor, 4.7μF, 35V | C0406 | Sprague 1500475x003 5B2 |
| C10 | Capacitor, 0.05μF, 12V | C0672 | RMC Type M-12 |
| C11 | Capacitor, 0.005μF, 150V | C0325 | Centralab DDM502 |
| Thru | | | |
| C13 | Same as C11 | | |
| C14 | Capacitor, 0.05μF, 12V | C0672 | RMC Type M-12 |
| C15 | Capacitor, 0.05μF, 12V | C0672 | RMC Type M-12 |
| C16 | Not Used | | |
| C17 | Capacitor, 56μF, 6V | C1090 | Sprague 1500566x9006B2 |
| C18 | Capacitor, 10μF, 6V | C1091 | Sprague 1500106x9006B2 |
| C19 | Capacitor, 0.10μF, 20V | C0806 | |
| C20 | Capacitor, 0.22μF, 35V | C0354 | Sprague 1500224x9035A2 |
| C21 | Capacitor, 100pF, 500V | C1075 | |
| C22 | Capacitor, 0.05μF, 12V | C0672 | RMC Type M-12 |
| C23 | Capacitor, 0.05μF, 12V | C0672 | RMC Type M-12 |
| CR1 | Diode, 6262 | CR0150 | Continental Devices 6262 |
| CR2 | Diode, 6262 | CR0150 | Continental Devices 6262 |
| IC1 | Integrated Circuit SD19716 | 19716 | |
| Thru | | | |
| IC4 | Same as IC1 | | |
| IC5 | Integrated Circuit SD19713 | 19713 | |
| IC6 | Integrated Circuit SD19716 | 19716 | |
| IC7 | Integrated Circuit SD19716 | 19716 | |
| IC8 | Integrated Circuit SD19716 | 19716 | |
| IC9 | Integrated Circuit SD19705 | 19705 | |
| IC10 | Integrated Circuit SD19705 | 19705 | |
| IC11 | Integrated Circuit SD19706 | 19706 | |
| IC12 | Integrated Circuit SD19713 | 19713 | |
| IC13 | Integrated Circuit SD19716 | 19716 | |
| IC14 | Integrated Circuit SD19711 | 19711 | |
| IC15 | Integrated Circuit SD19711 | 19711 | |

Frequency Function Parts List (con't.)

| Ref. | Description | SD Part No. | Manufacturers Part No. |
|---|---|---|---|
| IC16 Thru IC20 | Integrated Circuit SD19711<br>Same as IC16 | 19711 | |
| IC21 | Integrated Circuit SD19708 | 19708 | |
| IC22 | Integrated Circuit SD19708 | 19708 | |
| L1 | Choke, 1000μH | L0068 | Stanwyck Dink .15 |
| R1 | Resistor, 1k, 1/4W, 5% | R0765 | Allen Bradley CB1025 |
| R2 | Resistor, 1k, 1/4W, 5% | R0765 | Allen Bradley CB1025 |
| R3 | Resistor, 1k, 1/4W, 5% | R0765 | Allen Bradley CB1025 |
| R4 Thru R15 | Resistor, 15k, 1/4W, 5%<br>Same as R1 | R0728 | Allen Bradley CB1525 |
| R16 | Resistor, 5.6k, 1/4W, 5% | R0821 | Allen Bradley CB5625 |
| R17 | Resistor, 560Ω, 1/4W, 5% | R0819 | Allen Bradley CB5615 |
| R18 | Resistor, 10k, 1/4W, 5% | R0766 | Allen Bradley CB1035 |
| R19 | Resistor, 1k, 1/4W, 5% | R0765 | Allen Bradley CB1025 |
| R20 | Resistor, 4.7k, 1/4W, 5% | R0892 | Allen Bradley CB7425 |
| R21 | Resistor, 10k, 1/4W, 5% | R0766 | Allen Bradley CB1035 |
| R22 | Resistor, 10k, 1/4W, 5% | R0766 | Allen Bradley CB1035 |
| R23 | Resistor, 5.6k, 1/4W, 5% | R0821 | Allen Bradley CB5625 |
| R24 | Resistor | | |
| R25 Thru R28 | Resistor, 470Ω, 1/4W, 5%<br>Same as R25 | R1044 | Allen Bradley CB4715 |
| R29 | Resistor, 5.6k, 1/4W, 5% | R0821 | Allen Bradley CB5625 |
| R30 | Resistor, 5.6k, 1/4W, 5% | R0821 | Allen Bradley CB5625 |
| R31 | Resistor, 470Ω, 1/4W, 5% | R1044 | Allen Bradley CB4715 |
| R32 | Resistor, 1k, 1/4W, 5% | R0765 | Allen Bradley CB1025 |
| R33 | Resistor, 1.5k, 1/4W, 5% | R0783 | Allen Bradley CB1525 |
| R34 | Resistor, 220k, 1/4W, 5% | R0967 | Allen Bradley CB2235 |
| R35 | Resistor, 470Ω, 1/4W, 5% | R1044 | Allen Bradley CB4715 |
| R36 | Resistor, 470Ω, 1/4W, 5% | R1044 | Allen Bradley CB4715 |
| R37 | Resistor, 10k, 1/4W, 5% | R0766 | Allen Bradley CB1035 |
| R38 | Resistor, 15k, 1/4W, 5% | R0728 | Allen Bradley CB1525 |
| R39 | Resistor, 6.8k, 1/4W, 5% | R0696 | Allen Bradley CB6825 |
| Q1 | Transistor, 2N3565 | Q023 | |
| Q2 | Transistor, 2N4870 | Q0266 | |

Frequency Function Parts List (con't.)

| Ref. | Description | SD Part No. | Manufacturers Part No. |
|---|---|---|---|
| Q3 | Transistor, 2N3646 | Q0218 | |
| Q4 | Transistor, SD15840 | 15840 | |
| Q5 | Transistor, 2N3643 | Q0179 | |
| Q6 | Transistor, 2N3643 | Q0179 | |
| S1 | Switch Reed, 19368 | 19368 | |
| Thru | | | |
| S15 | Same as S1 | | |

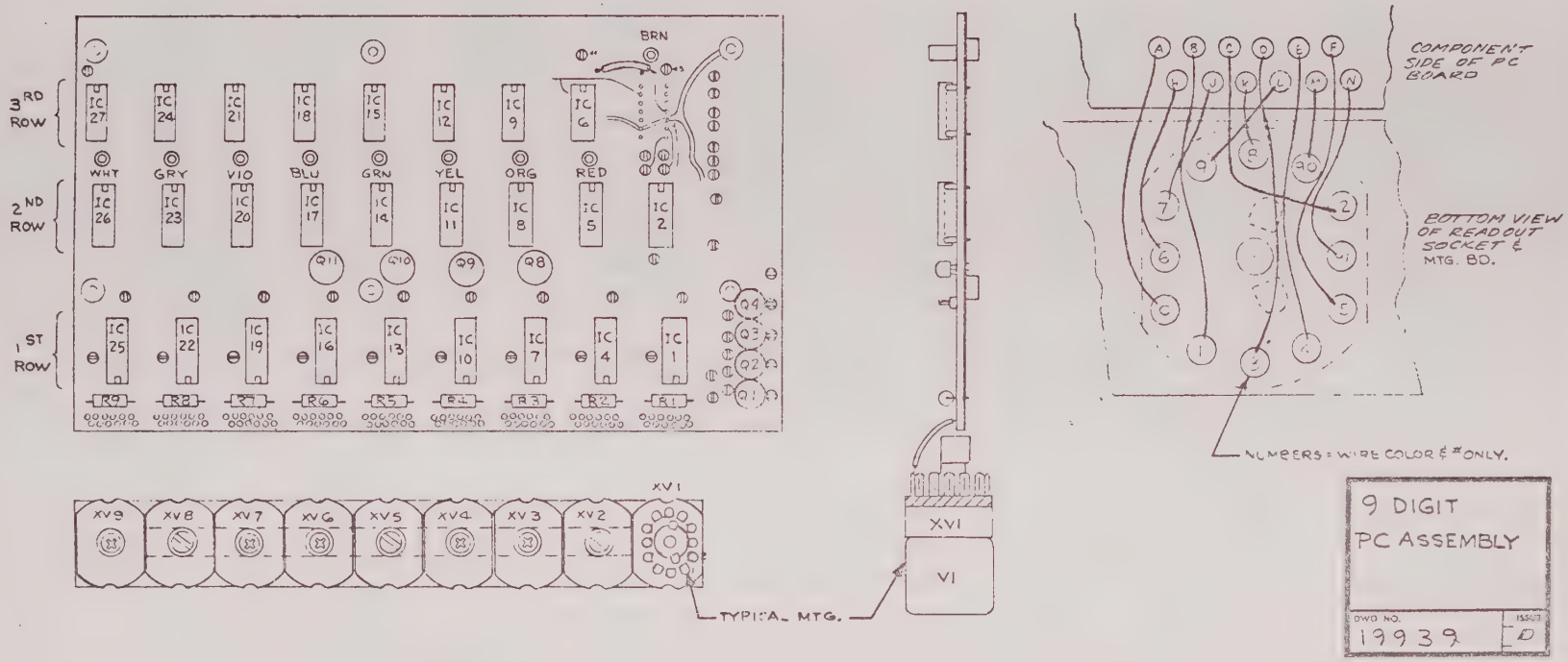


Figure 6-18. 9 Digit P.C. Assembly [19939D]

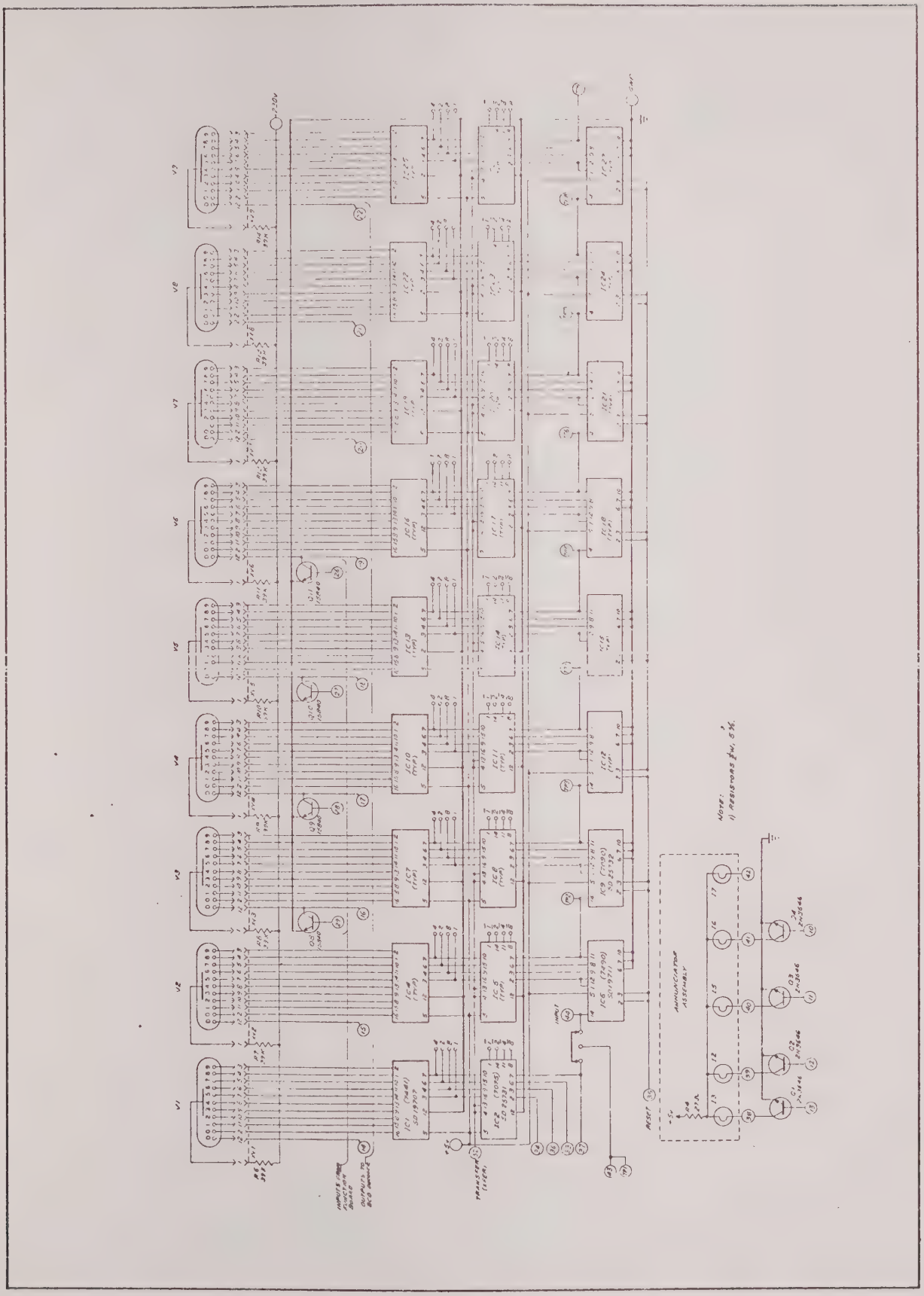

Figure 6-19. Schematic 9 Digit P.C. Assembly [23197D]

9 Digit P.C. Assembly Parts

| Ref. | Description | SD Part No. | Manufacturers Part No. |
|---|---|---|---|
| IC1 | Integrated Circuit, 7441 | 19707 | |
| IC2 | Integrated Circuit, 7075 | 25731 | |
| IC3 | Not Used | | |
| IC4 | Integrated Circuit, 7441 | 19707 | |
| IC5 | Integrated Circuit, 7075 | 25731 | |
| IC6 | Integrated Circuit, 7940 | 19711 | |
| IC7 | Integrated Circuit, 7441 | 19707 | |
| IC8 | Integrated Circuit, 7075 | 25731 | |
| IC9 | Integrated Circuit, 7090 | 25732 | |
| IC10 | Integrated Circuit, 7441 | 19707 | |
| IC11 | Integrated Circuit, 7075 | 25731 | |
| IC12 | Integrated Circuit, 7090 | 25732 | |
| IC13 | Integrated Circuit, 7441 | 19707 | |
| IC14 | Integrated Circuit, 7075 | 25731 | |
| IC15 | Integrated Circuit, 7090 | 25732 | |
| IC16 | Integrated Circuit, 7441 | 19707 | |
| IC17 | Integrated Circuit, 7075 | 25731 | |
| IC18 | Integrated Circuit, 7090 | 25732 | |
| IC19 | Integrated Circuit, 7441 | 19707 | |
| IC20 | Integrated Circuit, 7075 | 25731 | |
| IC21 | Integrated Circuit, 7090 | 25732 | |
| IC22 | Integrated Circuit, 7441 | 19707 | |
| IC23 | Integrated Circuit, 7075 | 25731 | |
| IC24 | Integrated Circuit, 7090 | 25732 | |
| IC25 | Integrated Circuit, 7441 | 19707 | |
| IC26 | Integrated Circuit, 7075 | 25731 | |
| IC27 | Integrated Circuit, 7090 | 25732 | |
| Q1 Thru | Transistor, 2N3646 | Q0218 | |
| Q4 | Same as Q1 | | |
| Q5 | Not Used | | |
| Q6 | Not Used | | |
| Q7 | Not Used | | |
| Q8 Thru | Transistor, 15840 | 15840 | |
| Q11 | Same as Q8 | | |
| Q12 | Not Used | | |

9 Digit P.C. Assembly Parts List (con't.)

| Ref. | Description | SD Part No. | Manufacturers Part No. |
|---|---|---|---|
| Q13 | Not Used | | |
| R1 Thru R9 | Resistor, 1/2W, 5%, 39k | R0282 | |
| | Same as R1 | | |

FINAL ASSEMBLY PARTS LIST

| Ref. | Description | SD Part No. | Manufacturers Part No. |
|---|---|---|---|
| C1 | Capacitor, .01μF, 150V, Disc | C0233 | Centralab DDM103 |
| C2 | Capacitor, .01μF, 100V, Disc | C0556 | RMC TA110 |
| C3 | Capacitor, .01μF, 500V, Disc | C0423 | RMC SM Series |
| C4 | Capacitor, .01μF, 500V, Disc | C0423 | RMC SM Series |
| C5 | Capacitor, .05μF, 100V, Disc | C0708 | Sprague TGS50 |
| C6 | Capacitor, .05μF, 100V, Disc | C0708 | Sprague TGS50 |
| Z1 | Line Filter | Z0001 | Comp. Corp. F1060-B |
| F1 | Fuse, 1 Amp, 250V, (Quick) | F0001 | Littlefuse 312001 |
| F2 | Fuse, 1 Amp, 250V, (Quick) | F0001 | Littlefuse 312001 |
| I1 | Lamp, Neon | I0074 | Edlema BG02-ACS-NE-2H |
| I2 | Lamp, Incandescent | I0050 | Chic Min CM8-666 |
| I3 | Lamp, Incandescent | I0050 | Chic Min CM8-666 |
| I4 | Lamp, Incandescent | I0050 | Chic Min CM8-666 |
| I5 | Not Used | | |
| I6 | Lamp, Incandescent | I0050 | Chic Min CM8-666 |
| J1 | Connector, BNC | J0260 | Amphenol UG1094A-U |
| J2 | Connector, Power Splitter | 23743 | |
| J3 | Connector, BNC | J0165 | Star UG1094-U |
| J4 | Connector, BNC | J0165 | Star UG1094-U |
| J5 | Not Used | | |
| J6 | Not Used | | |
| J7 | Not Used | | |
| J8 | Not Used | | |
| J9 | Connector, BNC | J0260 | Amphenol UG1094A-U |
| R1 | Pot & Switch, 5k, SPDT | R2308 | Mallory MLC5KMDAC SPDT |
| R2 | Not Used | | |
| R3 | Pot & Switch, 2M, SPDT | R2314 | Centralab Model 3 B7-1300 |
| R4 | Resistor, 27Ω, 1/4W, 5% | R1548 | A-B |
| R5 | Resistor, 470Ω, 1/4W, 5% | R1044 | A-B |
| R6 | Resistor, 27Ω, 1/4W, 5% | R1548 | A-B |
| S1 | Switch, SPDT, (Part of R1) | | |
| S2 | Not Used | | |
| S3 | Switch, SPDT, (Part of R3) | | |
| S4 | Switch, w/Shake | S0160 | Greyhill 30-1 |
| S5 | Switch, SPDT | S0149 | C & K 7101 |
| S6 | Switch, Rotary | S0352 | Oak DEM 269671-A1 |
| S7 | Switch, SPST, 6 Amp | S0328 | Mallory ROAC-IA |
| S8 | Switch, DPDT | S0150 | C & K 7201 |

# CHAPTER 7

# OPTIONS

## 7.1 INTRODUCTION

This chapter includes description, technical data, and drawings pertaining to the standard options available for this instrument.

## 7.2 OSCILLATOR OPTIONS

### 7.2.1 Medium Stability "B3" Oscillator

The "B3" Option provides the instrument with a medium stability oscillator. The "B3" Oscillator has an output frequency of 3 MHz. A divide-by-three circuit has been added, to convert this output frequency to the required 1 MHz frequency reference, along with a separate power supply.

The improved specifications for this oscillator are listed below:

1. Aging rate: ±3 parts in $10^9$/24 hours.
2. Warm-up time to reach specified aging rate: 72 hours.
3. Aging rate after 60 days continuous operation: < 3 parts in $10^9$/24 hrs.
4. Short term stability averaged over 1 second: ±2 parts in $10^{10}$ rms.
5. Long-term aging rate: ±2 parts in $10^8$/7 days.
6. Variation with temperature (average ±2 parts in $10^{10}$/°C): -20°C to +25°C: ±9 parts in $10^9$, 25°C 50 55°C: ±6 parts in $10^9$.
7. ±10% change in line voltage: ±5 parts in $10^{10}$.

The following drawings are a prat of this option and are included at the back of this chapter.

Drawing #25667 B3 option Schematic
25666 B3 option Final Ass'y.
23112 ÷3 1 MHz Schematic
23110 ÷3 1 MHz Assembly

### 7.2.2 High Stability "B" Oscillator

The "B" Option provides the instrument with a high stability oscillator. The "B" oscillator has an output frequency of 3 MHz. A divide-by-three circuit has been added, to convert this output frequency to the required 1 MHz reference frequency, along with a separate power supply. Thre required specifications for this oscillator are listed below:

| Specifications | Option B Oscillator |
|---|---|
| Aging rate after warnm-up | < ±1 part in $10^8$/ 24 hours |
| Maximum warm-up | 72 hours |
| Frequency retrace for off periods up to approx. 24 hours. | 1 hour typical to reach ±6 parts in $10^8$ max. |
| Short-term aging rate | ±1 part in $10^{10}$ rms for 1 second average |
| Temperature variation | < ±2 parts in $10^{10}$/ °C, typical (max. ±1 part in $10^9$ over 20° change within -20° to +50°C) |
| 10% change in line voltage from specified | ±5 parts in $10^{10}$ |
| Long-term aging-rate | ±3 parts in $10^8$/ 30 days |

The following drawings are a part of this option and are included at the back of this chapter.

Drawing #25618 B Option Schematic
25610 ~~25601~~ B Option Final Ass'y 7-13
23112 ÷3 1 MHz Schematic
23110 ÷3 1 MHz Assembly
19786 "B Option" Power Supply Assembly

7.2.3 High Stability "B5" Oscillator P.7-19

The "B5" option provides the instrument with a high stability oscillator. The "B5" oscillator has an output frequency of 3 MHz. A divide-by-three circuit has been added, to convert this output frequency to the required 11 MHz reference frequency, along with a separate power supply and regulator circuit. The improved specifications for the "B5" Oscillator Option are listed below: 1MHz

| Specifications | Option B5 Oscillator |
|---|---|
| Aging rate after warm-up | ±5 parts in $10^{10}$/ 24 hours |
| Maximum warm-up | 72 hours |
| Frequency retrace for off periods up to approx. 24 hours | 1 hour typical to reach < ±5 parts in $10^{9}$ |
| Short-Term aging rate | ±5 parts in $10^{11}$ for 1 second average |
| Temperature variation | <±2 parts in $10^{10}$/ °C, typical (max. ±1 part in $10^{9}$ over 20° change within -20° to +50°C) |
| 10% change in line voltage from specified | ±5 parts in $10^{1}$ |
| Long-term aging rate | ±1.5 parts in $10^{8}$/ 30 days |

The following drawings are a part of this option included at the back of this chapter.

Drawing #27387 B5 Option Schematic
27228 B5 Option Final Ass'y
23112 ÷3 1 MHz Schematic
23110 ÷3 1 MHz Assembly
27217 B5 Regulator Schematic
27220 B5 Regulator Assembly

## 7.3 BCD OPTIONS

### 7.3.1 "D1" BCD Option

This option provides the instrument with a 1-2-4-8 BCD output at the rear panel BCD connector. The option uses a positive logic system in which ONE = +15 ±0.5 V, and ZERO = 0.25 ±0.25 V, and is compatible with standard digital recorders. It includes a capacity for 8 digits plus units-of-measure, decimal location, ±reference, print command, inhibit reset, and instrument ground. The print command is a 0 to +15V step occuring at the end of each measurement cycle.

The rear panel BCD connector pin connections are as follows:

| Function | BCD | PIN |
|---|---|---|
| $10^{0}$ | 1 | 1 |
| | 2 | 2 |
| | 4 | 26 |
| | 8 | 27 |
| $10^{1}$ | 1 | 3 |
| | 2 | 4 |
| | 4 | 28 |
| | 8 | 29 |
| $10^{2}$ | 1 | 5 |
| | 2 | 6 |
| | 4 | 30 |
| | 8 | 31 |
| $10^{3}$ | 1 | 7 |
| | 2 | 8 |
| | 4 | 32 |
| | 8 | 33 |

| Function | BCD | PIN |
|---|---|---|
| $10^4$ | 1 | 9 |
| | 2 | 10 |
| | 4 | 34 |
| | 8 | 35 |
| $10^5$ | 1 | 11 |
| | 2 | 12 |
| | 4 | 36 |
| | 8 | 37 |
| $10^6$ | 1 | 13 |
| | 2 | 14 |
| | 4 | 38 |
| | 8 | 39 |
| $10^7$ | 1 | 15 |
| | 2 | 16 |
| | 4 | 40 |
| | 8 | 41 |
| MU | 1 | 17 |
| | 2 | 18 |
| | 4 | 42 |
| | 8 | 43 |
| DP | 1 | 19 |
| | 2 | 20 |
| | 4 | 44 |
| | 8 | 45 |
| + REF | 25 | (+12V) |
| - REF | 24 | (+3V) |
| GND | 50 | |
| Print Com. | 23 | |
| Inhibit Reset | 47 | |

BCD MU Translation
GHz = Binary 1
MHz = Binary 2
kHz = Binary 3

The following drawings are a part of this option, and are included at the back of this chapter.
Drawing #23454 D1 Option Schematic
23874 D1 Option Assembly

7.3.2 "D3" BCD Option

This option provides the instrument with a 1-2-4-8 BCD output at the rear panel BCD connector. The option uses a positive logic system in which ONE = +5 ±0.5V, and ZERO = 0.25 ±0.25V, and is compatible with DTL, TTL, and RTL logic systems. It includes a capacity for 8 digits, plug units-of-measure, Decimal location, ± reference, print command, inhibit reset, and instrument ground. The print command is a 0 to +5V step occuring at the end of each measurement cycle.

The rear panel BCD connector pin connections are as follows:

| Function | BCD | PIN |
|---|---|---|
| $10^0$ | 1 | 1 |
| | 2 | 2 |
| | 4 | 26 |
| | 8 | 27 |
| $10^1$ | 1 | 3 |
| | 2 | 4 |
| | 4 | 28 |
| | 8 | 29 |
| $10^2$ | 1 | 5 |
| | 2 | 6 |
| | 4 | 30 |
| | 8 | 31 |
| $10^3$ | 1 | 7 |
| | 3 | 8 |
| | 4 | 32 |
| | 8 | 33 |
| $10^4$ | 1 | 9 |
| | 2 | 10 |
| | 4 | 34 |
| | 8 | 35 |
| $10^5$ | 1 | 11 |
| | 2 | 12 |
| | 4 | 36 |
| | 8 | 37 |

| Function | BCD | PIN |
|---|---|---|
| $10^6$ | 1 | 13 |
| | 2 | 14 |
| | 4 | 38 |
| | 8 | 39 |
| $10^7$ | 1 | 15 |
| | 2 | 16 |
| | 4 | 40 |
| | 8 | 41 |
| MU | 1 | 17 |
| | 2 | 18 |
| | 4 | 42 |
| | 8 | 43 (GND) |

| Function | BCD | PIN |
|---|---|---|
| DP | 1 | 19 |
| | 2 | 20 |
| | 4 | 44 |
| | 8 | 45 |
| + Reference | 25 | +4V |
| - Reference | 24 | +1V |
| Print Command | 24 | (positive) |
| Print Command | 48 | (negative) |
| Reset Inhibit | 47 | |

BCD MU Translation
GHz = Binary 1
MHz = Binary 2
kHz = Binary 3

The following drawings are a part of this option, and are included in the back of this chapter:

Drawing #S29436 D3 Option Schematic
S29592 Decoder Diode Schematic
S29439 D3 Option PC Assembly

## 7.4 REMOTE CONTROL "P" OPTION

This option provides for single line remote control of the instrument's RESOLUTION and RANGE functions, through the rear panel REMOTE connector J8.

The following is a listing of the control function, the Frequency Function Board connection, and the J8 connector pin.

| Control Switch | Control Function | Frequency Function Board | Remote Control J8 |
|---|---|---|---|
| RANGE | Remote Gnd. | 14 | 1 |
| | Test | 13 | 2 |
| | Rate | 19 | 3 |
| | Prescaler | 15 | 4 |
| | Range #1 | 16 | 5 |
| | Range #2 | 44 | 6 |
| RESOLUTION | Remote Gnd. | 37 | 10 |
| | $10^{-6}$ | 29 | 11 |
| | $10^{-5}$ | 30 | 13 |
| | $10^{-4}$ | 31 | 14 |
| | $10^{-3}$ | 32 | 15 |
| | $10^{-2}$ | 33 | 16 |
| | $10^{-1}$ | 34 | 17 |
| | 1 | 35 | 18 |
| | 10 | 36 | 19 |
| | Instrument Gnd. | | 30 |
| | Remote Reset | 11 | 36 |

## 7.5 REAR PANEL INPUT CONNECTORS, "R1" OPTION

This option provides rear panel connectors in parallel with the front panel 0-.1 GHz connector no other circuit changes are involved. Input circuit capacity is increased by about 50 pF.

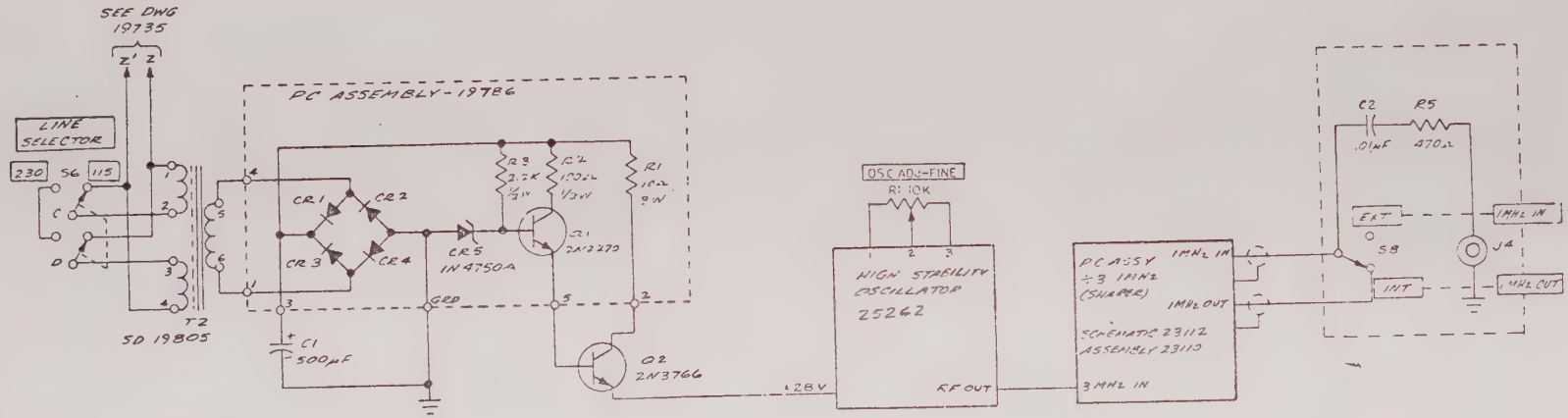


Figure 7-1. B3 Option Schematic (25667)

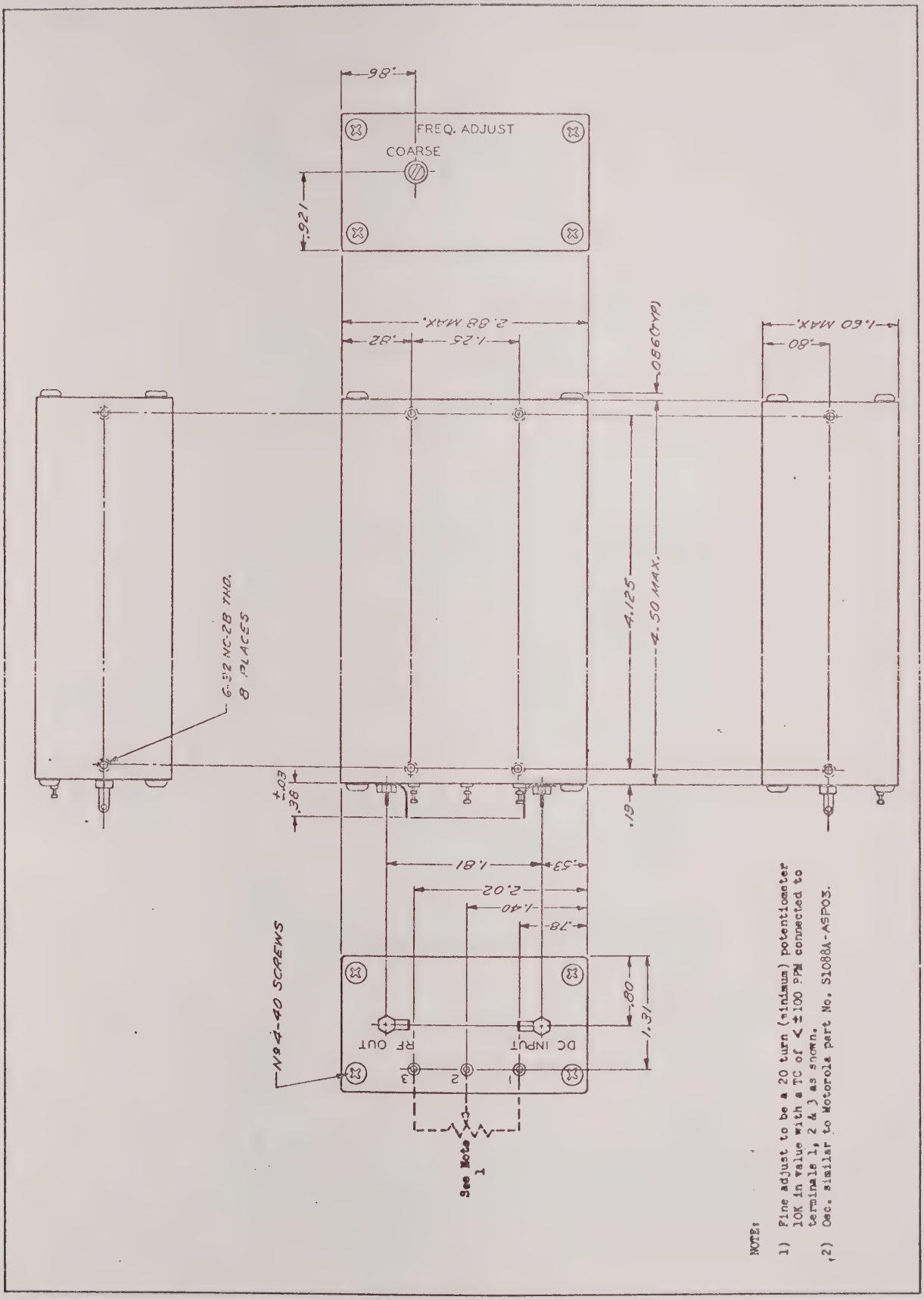


Figure 7-2. B3 High Stability Oscillator Assembly (25262)

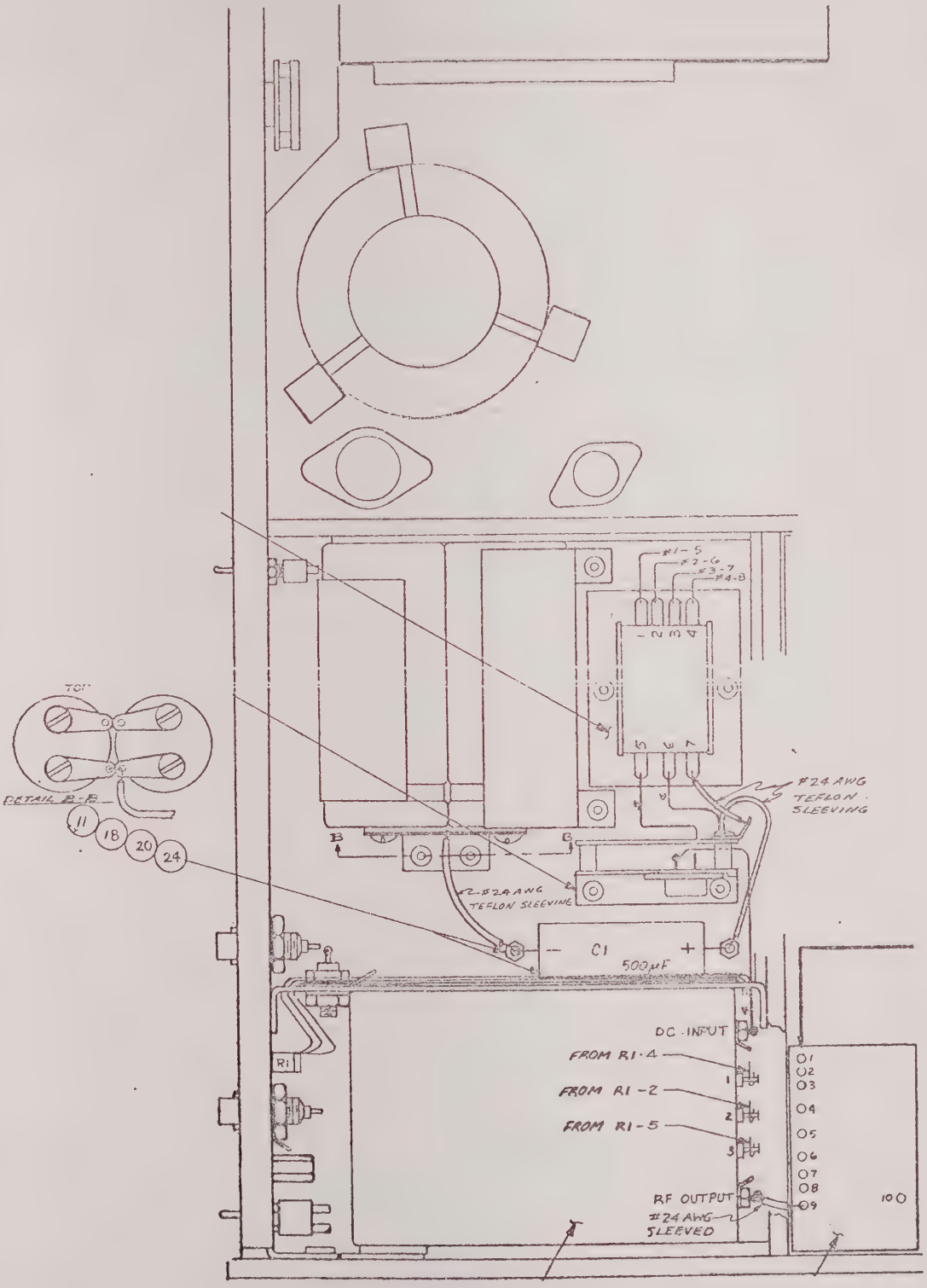


Figure 7-3. B3 Final Assembly (25666)

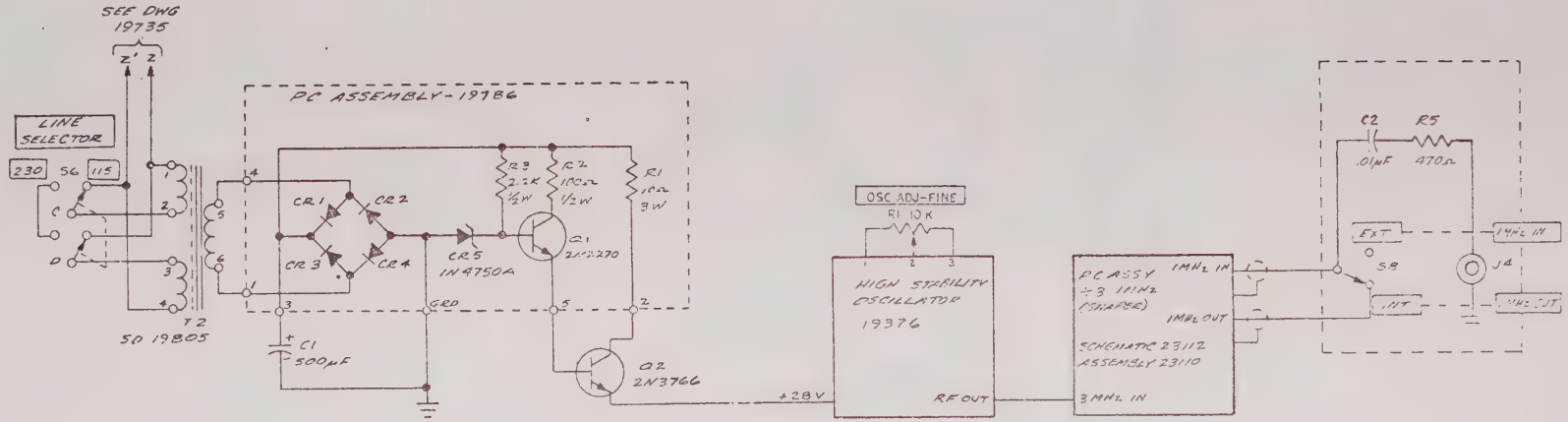


Figure 7-4. B Option Schematic (25618)

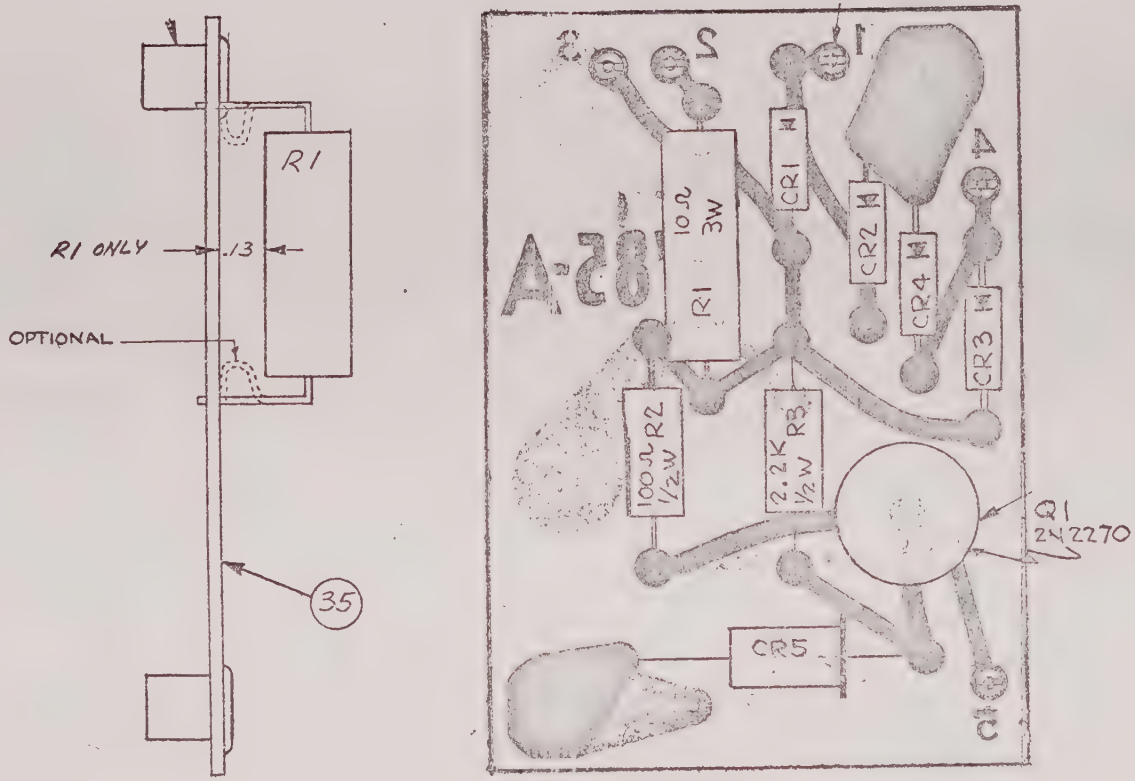


Figure 7-5. B Option Power Supply Assembly (19786)

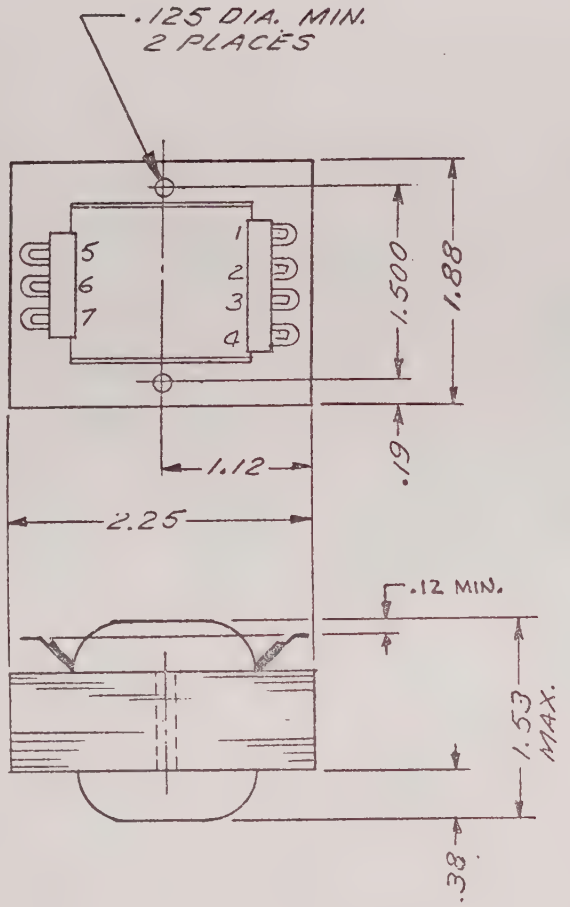


TRANSFORMER SPECIFICATION

| | | |
|---|---|---|
| MECHANICAL: | | E-I construction |
| | | lug terminations as shown. |
| | | 70°C ambient maximum |
| | | 40°C rise (continuous) See below |
| | | 60°C rise (transient) |
| Primary: | | 117V (105-130V) 50-400 cps |
| Start: | pin 1 | 234V (210-260V) |
| Finish: | pin 2 | electrostatically shielded |
| Start: | pin 3 | (4 terminals) |
| Finish: | pin 4 | |
| Shield: | pin 7 | |
| Secondary: | | 33.5 $V_{RMS}$ ± 5% (no load) |
| Start: | pin 5 | 7 Ω maximum, 4 Ω minimum* |
| Finish: | pin 6 | loading = 0.18 $A_{RMS}$ 40°C rise |
| | | = 0.61 $A_{RMS}$ 60°C rise |
| | | *Resistance values are $r_s + a^2 r_p$ @ 25°C ambient (across full secondary). |
| Marking: | | Transformer shall be marked 19805-B plus the manufacturer's name or trademark. |
| | | Terminals marked as shown. |

Figure 7-6. B Option Transformer (19805)

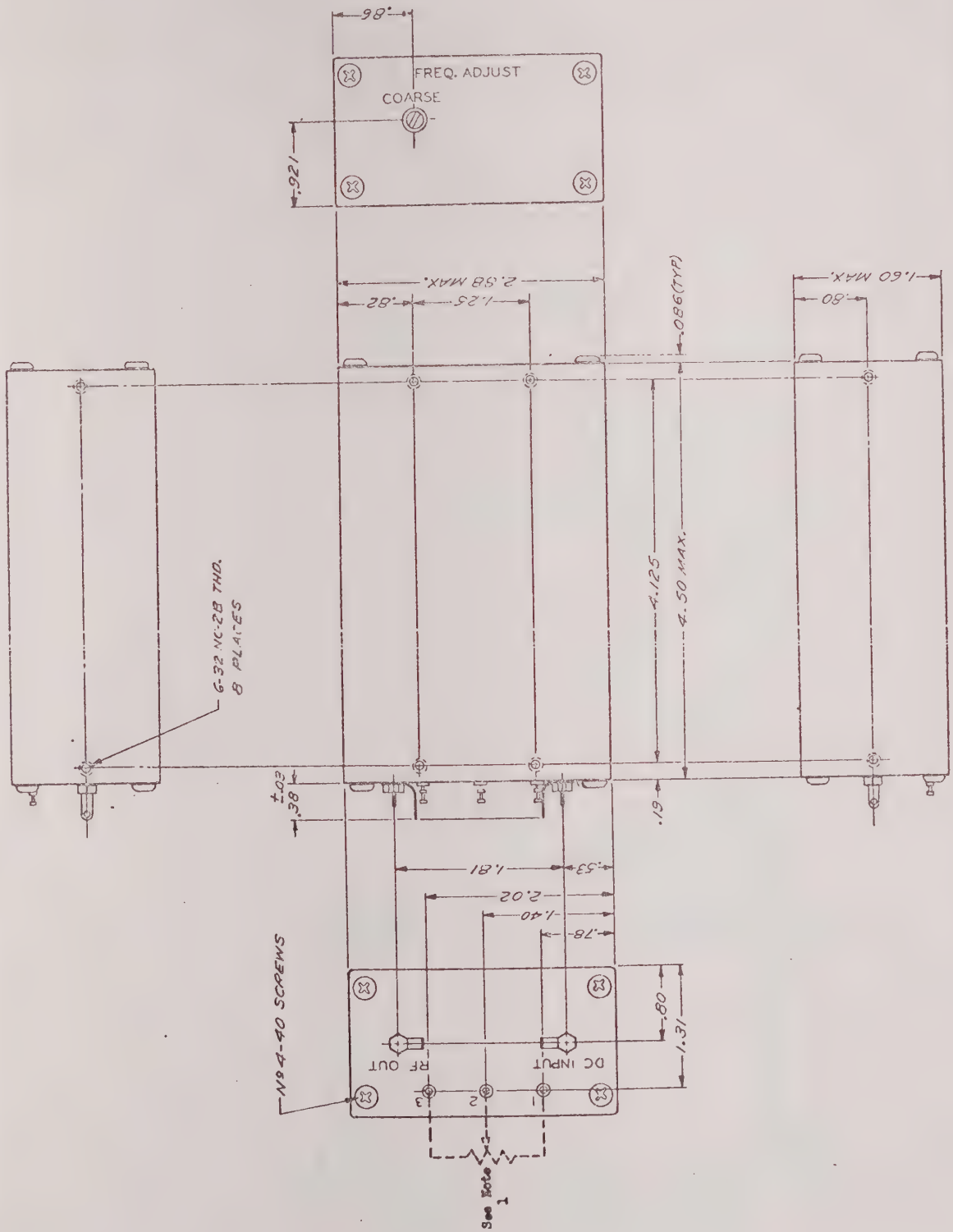


Figure 7-7. B High Stability Oscillator (19376)

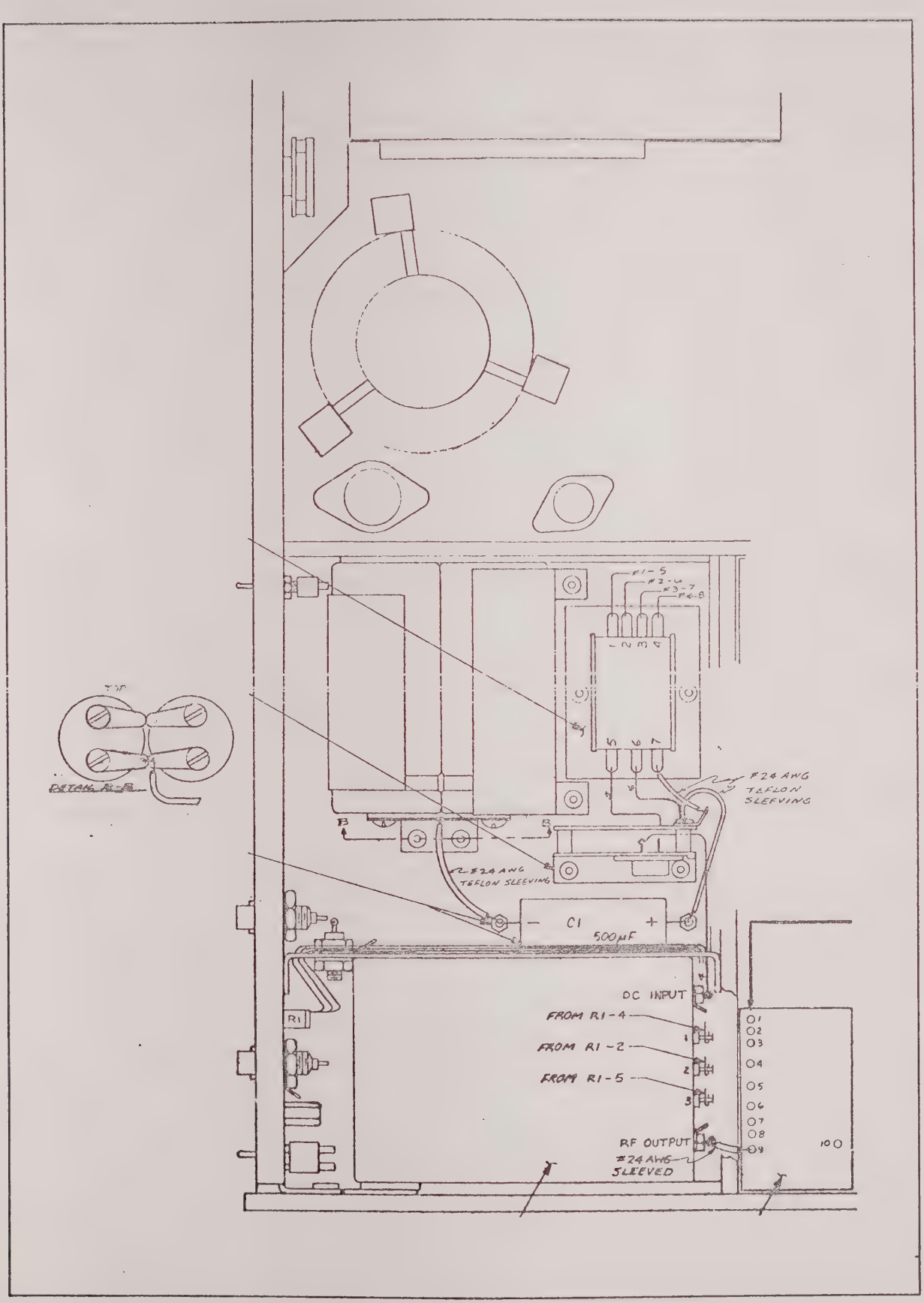


Figure 7-8. B Option Final Assembly (25610)

B Option Power Supply P.C. Assembly Parts List

| Ref. | Description | SD Part No. | Manufacturers Part No. |
|---|---|---|---|
| | Schematic | 19783 | |
| CR1 | Diode, DI-52 | CR0148 | |
| Thru | | | |
| CR4 | Same as CR1 | | |
| CR5 | Diode, Zener IN3030A, 1W, 5%, 27V | CR0224 | |
| Q1 | Transistor, 2N2270 | Q0102 | |
| R1 | Resistor, 10Ω, 3W Sprague | R2301 | |
| R2 | Resistor, 100Ω, 1/2W, 5% | R0466 | |
| R3 | Resistor, 2.2k, 1/2W, 5% | R0259 | |

B Option Final Assembly Parts List

| Ref. | Description | SD Part No. | Manufacturers Part No. |
|---|---|---|---|
| C1 | Capacitor, 500μF, 50V | C1087 | |
| R1 | Resistor, 10k, POT | R2392 | |
| T2 | Transformer "B" Option Spec. | 19805 | |
| | Delete Socket, 8 Pin Octal | X0004 | |

B3 Option Final Assembly Parts List

| Ref. | Description | SD Part No. | Manufacturers Part No. |
|---|---|---|---|
| C1 | Capacitor, 500μF, 50V | C1087 | |
| R1 | Resistor, 10k, POT | R2392 | |
| T2 | Transformer "B" Option Spec | 19805 | |

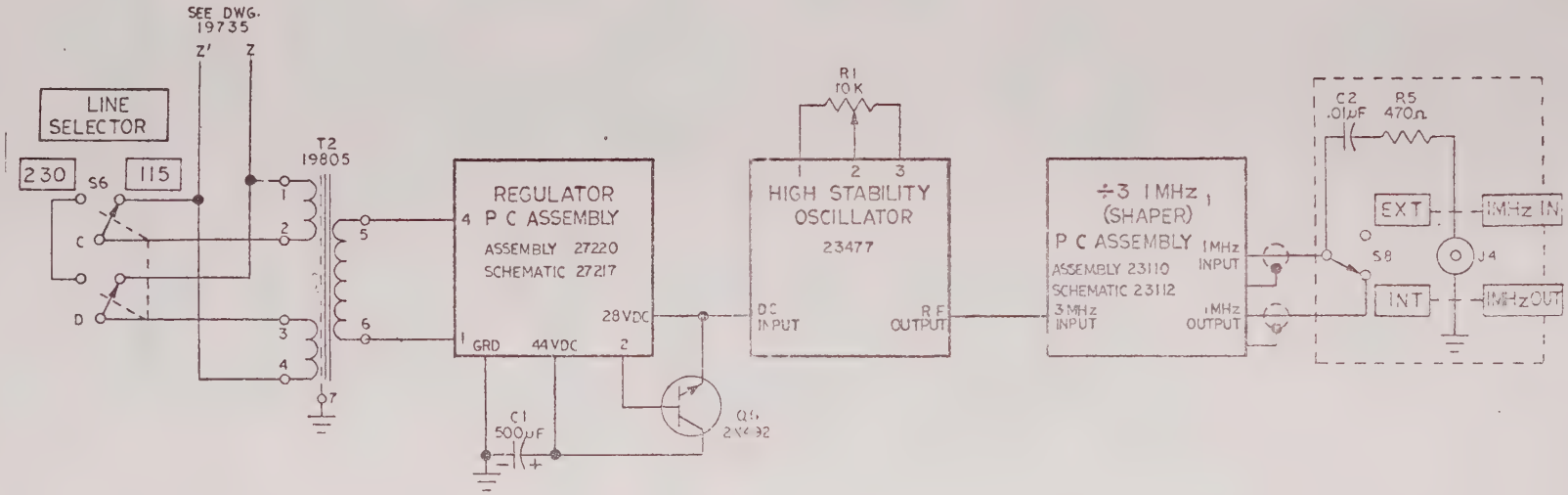


Figure 7-9. B5 Option Schematic (27387)

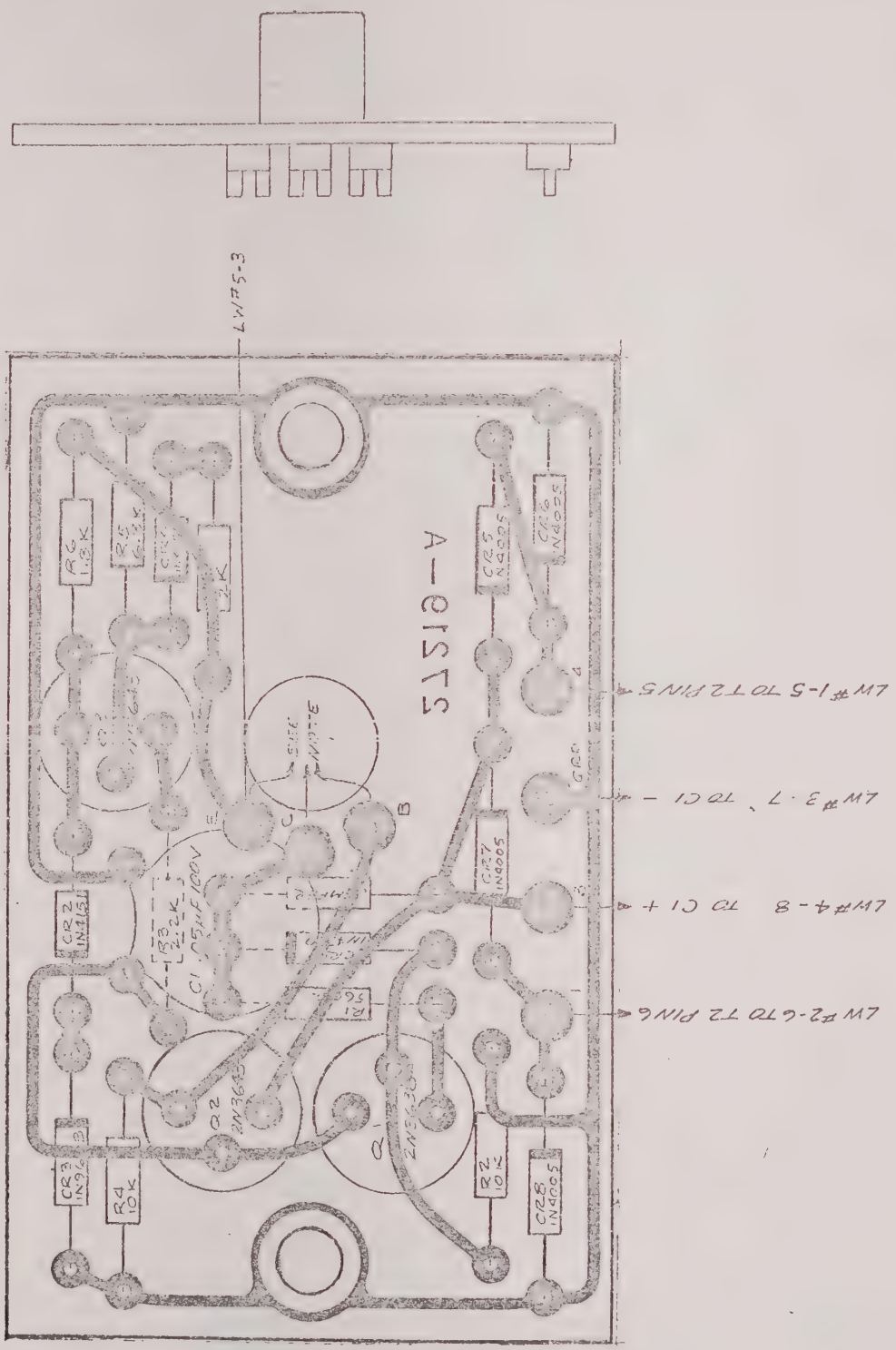


Figure 7-10. B5 Regulator Assembly (27720)

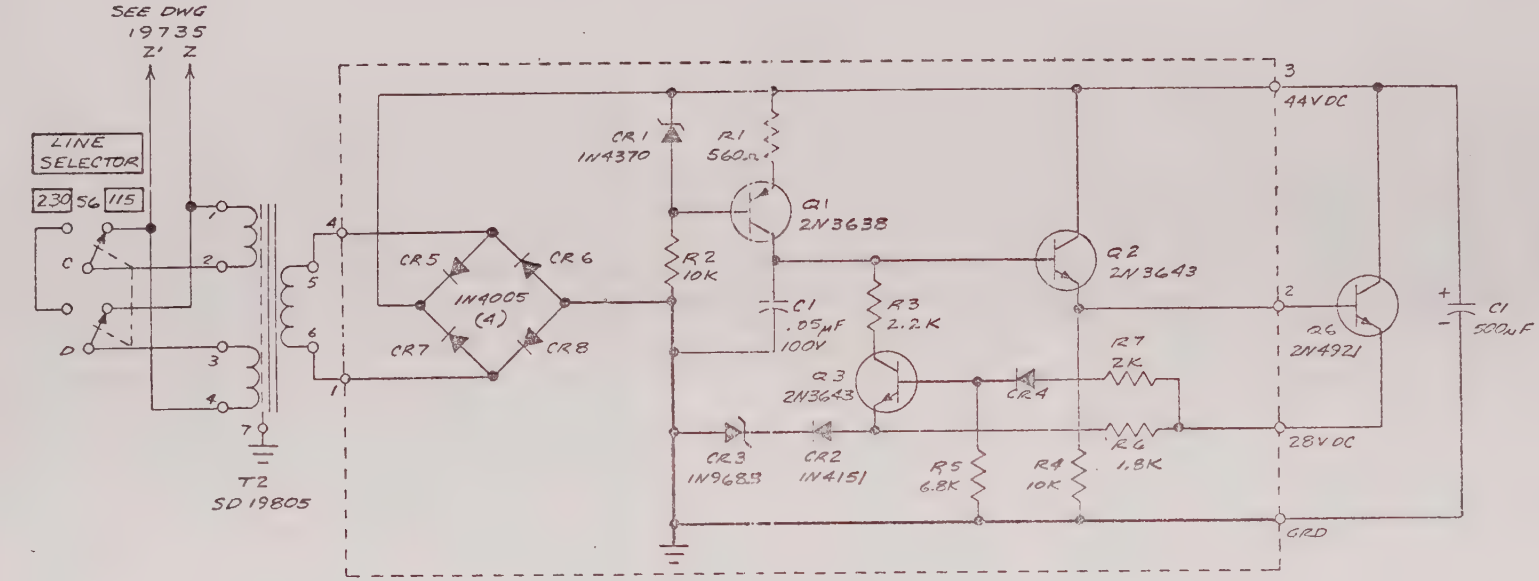


NOTE:
1. ALL RESISTORS 1/4W, ±5%.

Figure 7-11. B5 Regulator Schematic (27217)

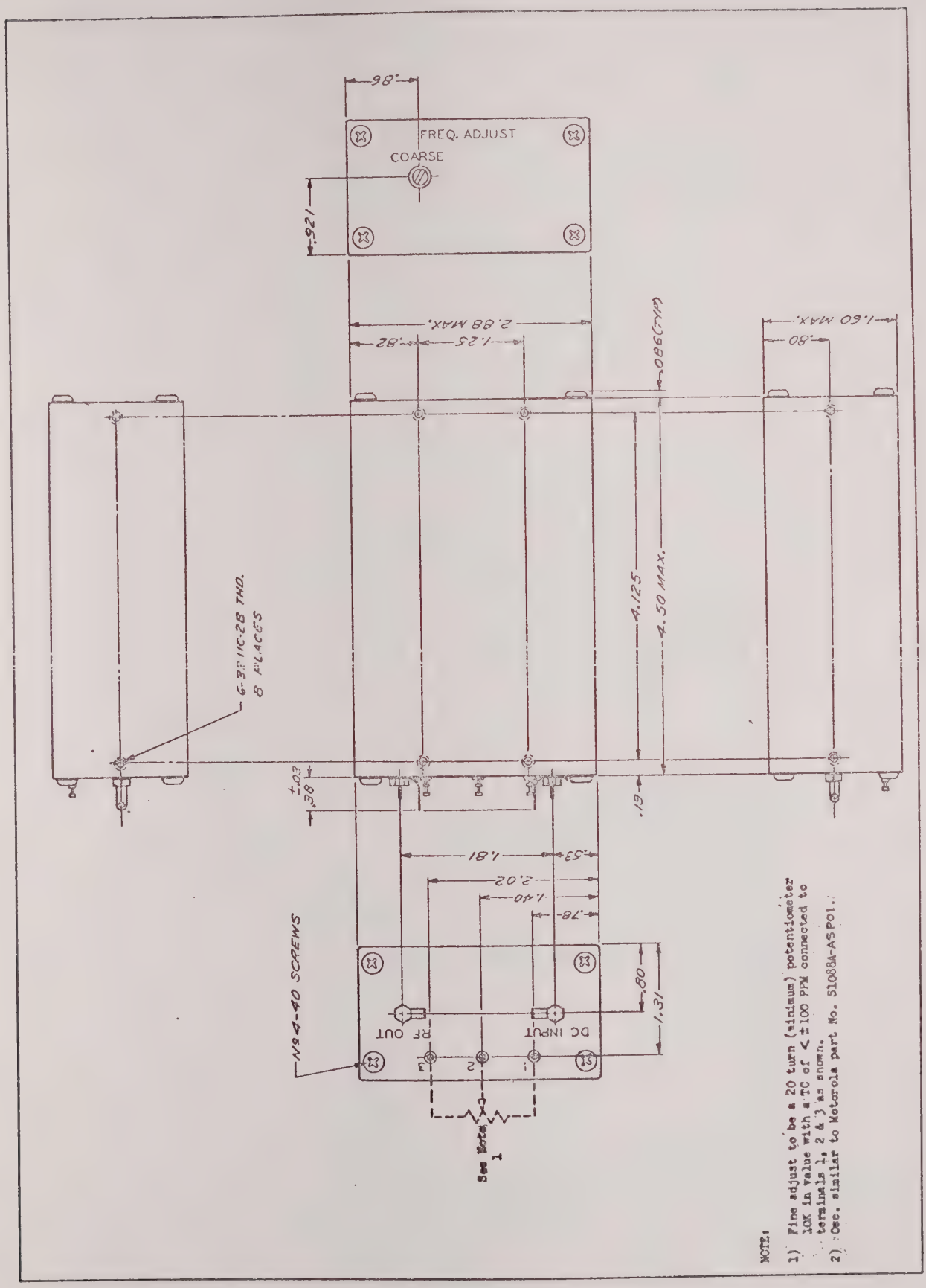


Figure 7-12. B5 High Stability Oscillator (23477)

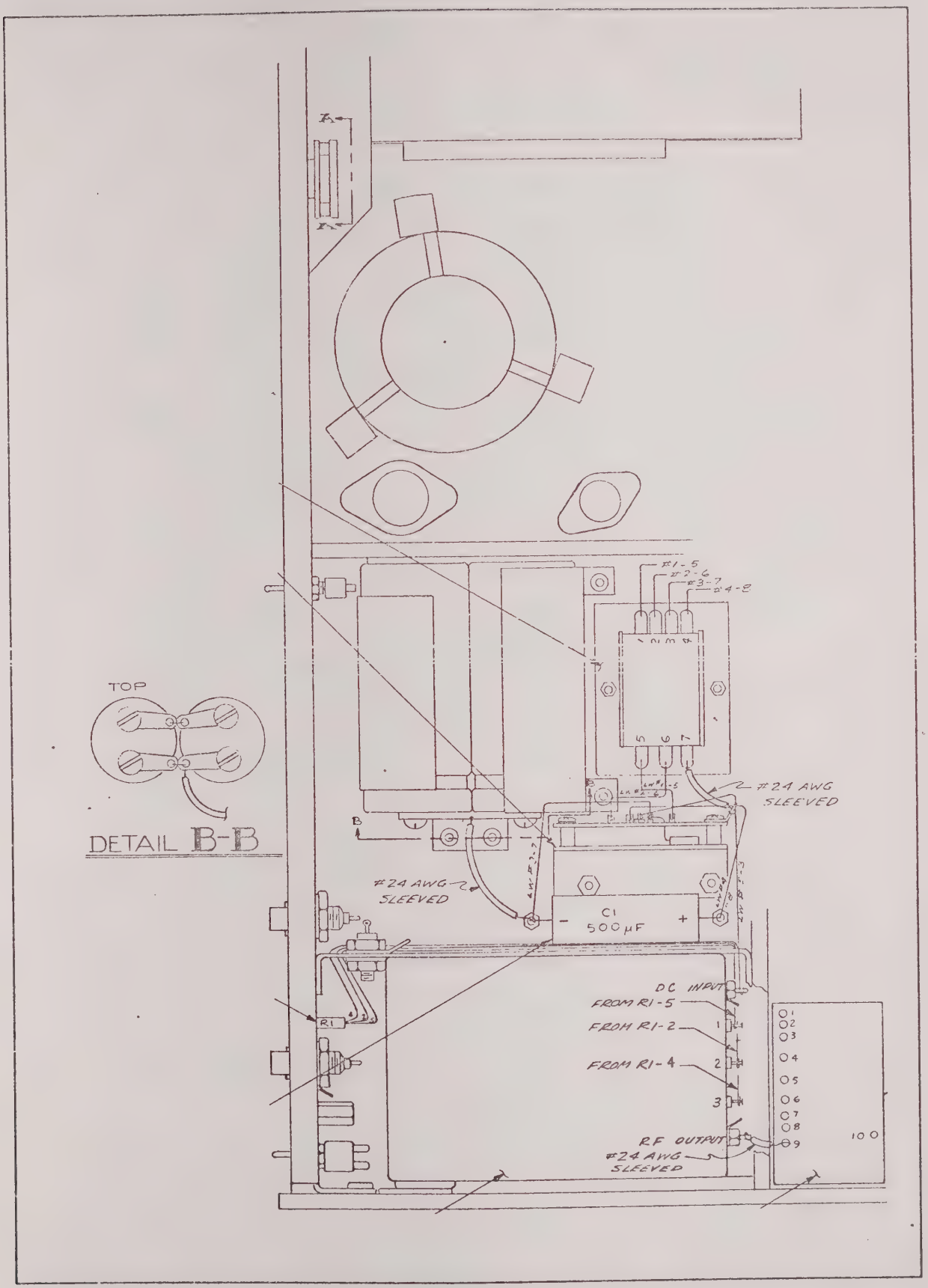


Figure 7-13. B5 Option Final Assembly (27228)

B5 Regulator P.C. Assembly Parts List

| Ref. | Description | SD Part No. | Manufacturers Part No. |
|---|---|---|---|
| | Schematic | 27217 | |
| C1 | Capacitor, .05, 50V, Disc. | C0708 | |
| CR1 | Diode, IN4370 | CR0309 | |
| CR2 | Diode, IN4151 | CR0150 | |
| CR3 | Diode, IN968B | CR0265 | |
| CR4 | Diode, IN4151 | CR0150 | |
| CR5 | Diode, IN4005 | CR0284 | |
| CR6 | Diode, IN4005 | CR0284 | |
| CR7 | Diode, IN4005 | CR0284 | |
| CR8 | Diode, IN4005 | CR0284 | |
| Q1 | Transistor, 2N3638 | Q0181 | |
| Q2 | Transistor, 2N3643 | Q0179 | |
| Q3 | Transistor, 2N3643 | Q0179 | |
| R1 | Resistor, 560Ω, 1/4W, 5% | R0819 | |
| R2 | Resistor, 10k, 1/4W, 5% | R0766 | |
| R3 | Resistor, 2.2k, 1/4W, 5% | R0749 | |
| R4 | Resistor, 10k, 1/4W, 5% | R0766 | |
| R5 | Resistor, 6.8k, 1/4W, 5% | R0696 | |
| R6 | Resistor, 1.8k, 1/4W, 5% | R0959 | |
| R7 | Resistor, 2k, 1/4W, 5% | R0734 | |

B5 Option Final Assembly Parts List

| Ref. | Description | SD Part No. | Manufacturers Part No. |
|---|---|---|---|
| C1 | Capacitor, 500μF, 50V | C1087 | |
| R1 | Resistor, 10k, POT | R2392 | |
| T2 | Transformer | 19805 | |
| | Delete Socket, 8 Pin Octal | X0004 | |

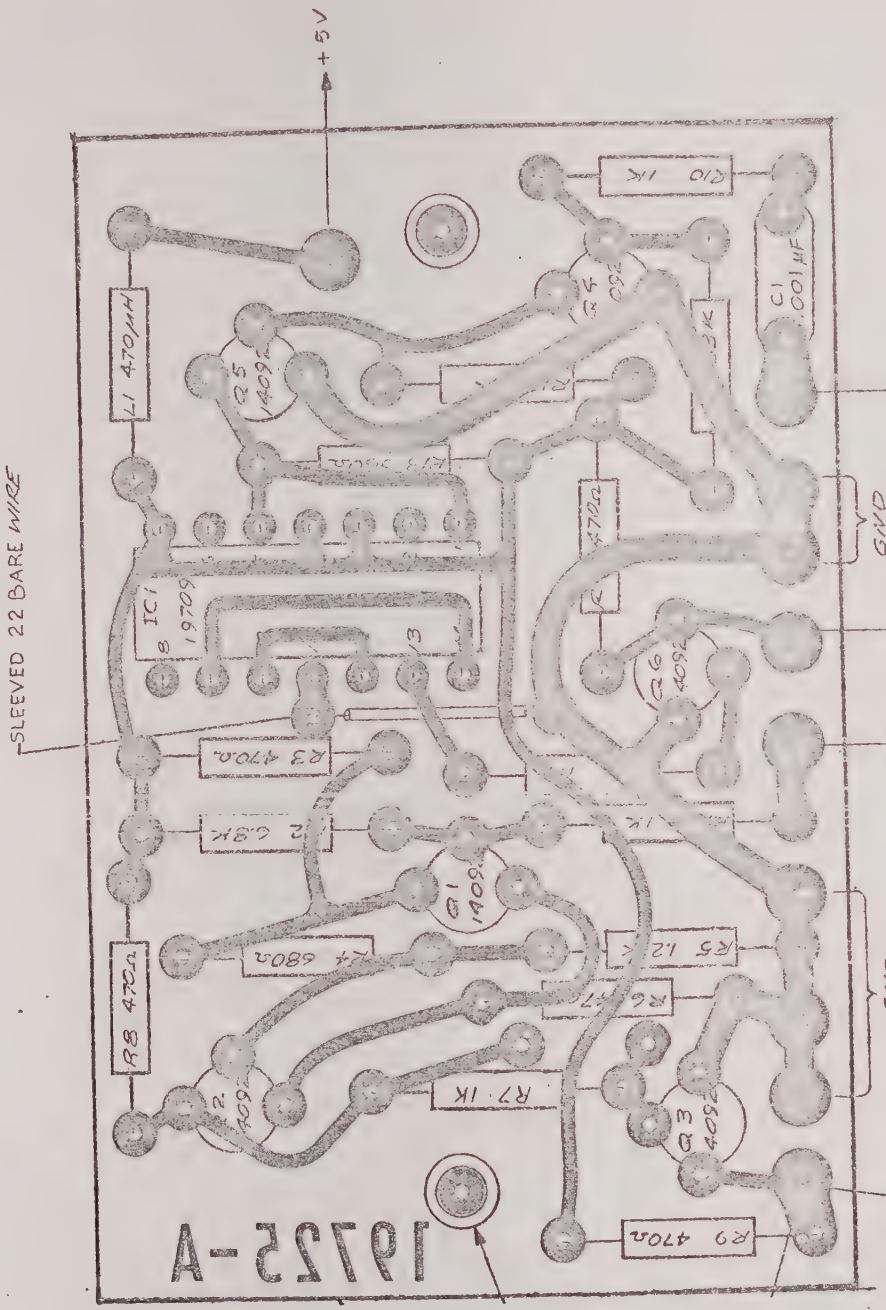


Figure 7-14. 3 1 MHz P.C. Assembly (23110)

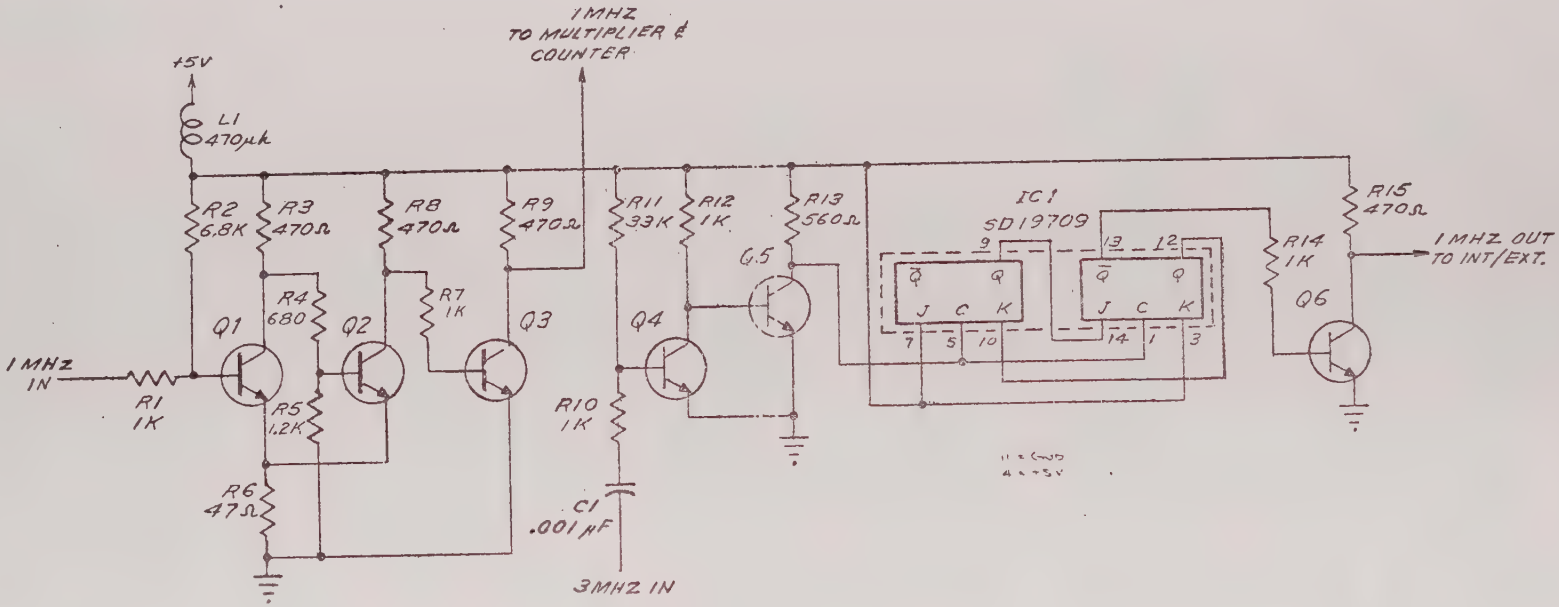


NOTE:
1) TRANSISTORS SD14092.
2) RESISTORS: 1/4W, 5%.

Figure 7-15. %3 1 MHz P.C. Schematic (23112)

## ÷3 1 MHz P.C. Assembly Parts List

| Ref. | Description | SD Part No. | Manufacturers Part No. |
|---|---|---|---|
| | Schematic | 23112 | |
| C1 | Capacitor, .001μF, 500V Disc. | C0424 | |
| IC1 | Integrated Circuit, SD19709 | 19709 | |
| L1 | Choke, 470μH | L0019 | |
| R1 | Resistor, 1k, 1/4W, 5% | R0765 | |
| R2 | Resistor, 6.8k, 1/4W, 5% | R0696 | |
| R3 | Resistor, 470Ω, 1/4W, 5% | R1044 | |
| R4 | Resistor, 680Ω, 1/4W, 5% | R1234 | |
| R5 | Resistor, 1.2k, 1/4W, 5% | R0809 | |
| R6 | Resistor, 47Ω, 1/4W, 5% | R0743 | |
| R7 | Resistor, 1k, 1/4W, 5% | R0765 | |
| R8 | Resistor, 470Ω, 1/4W, 5% | R1044 | |
| R9 | Resistor, 470Ω, 1/4W, 5% | R1044 | |
| R10 | Resistor, 1k, 1/4W, 5% | R0765 | |
| R11 | Resistor, 33k, 1/4W, 5% | R0780 | |
| R12 | Resistor, 1k, 1/4W, 5% | R0780 | |
| R13 | Resistor, 560Ω, 1/4W, 5% | R0819 | |
| R14 | Resistor, 1k, 1/4W, 5% | R0780 | |
| R15 | Resistor, 470Ω, 1/4W, 5% | R1044 | |
| | Terminal | E0100 | |

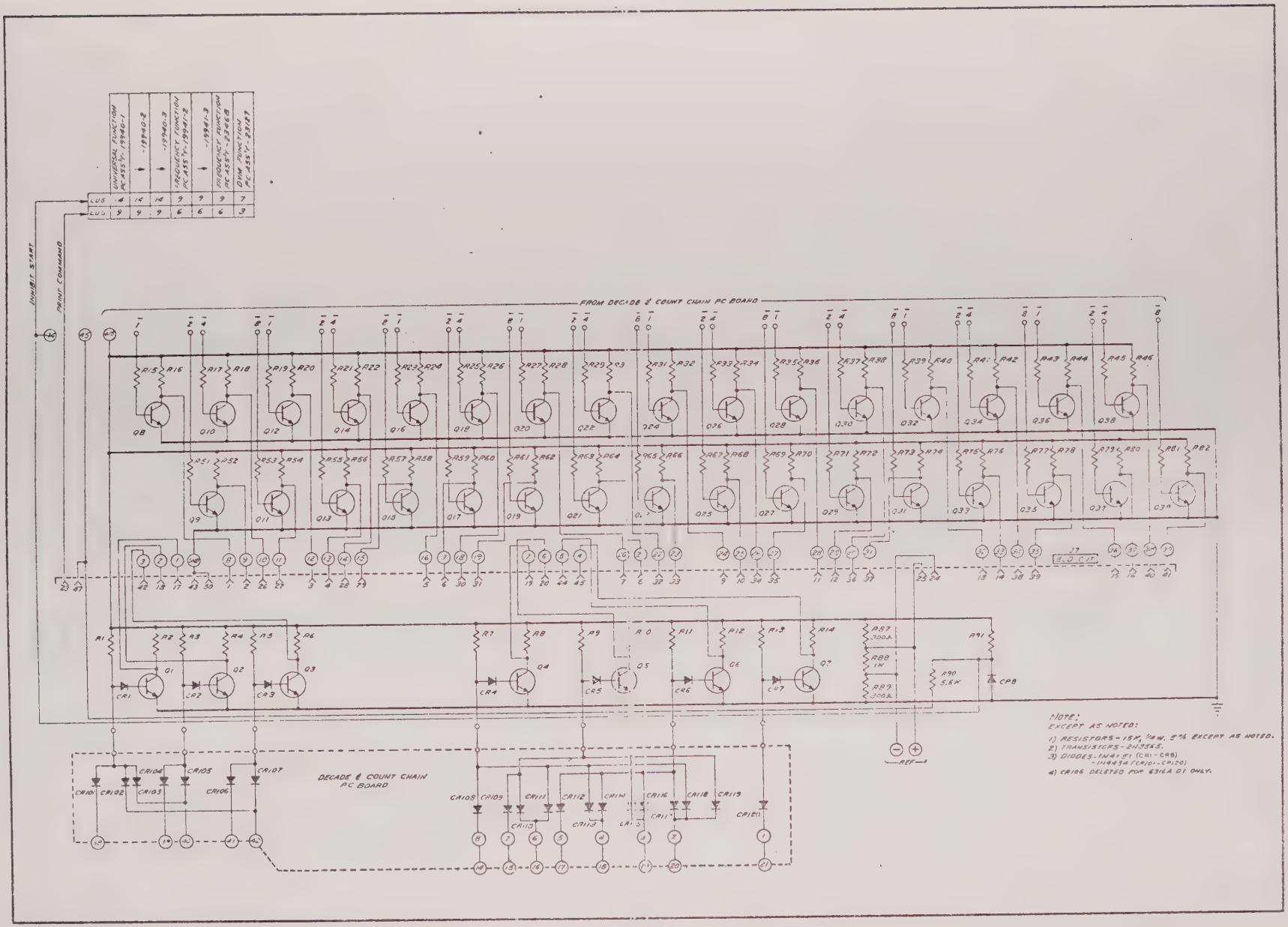


Figure 7-16. D1 Option Schematic (23454)

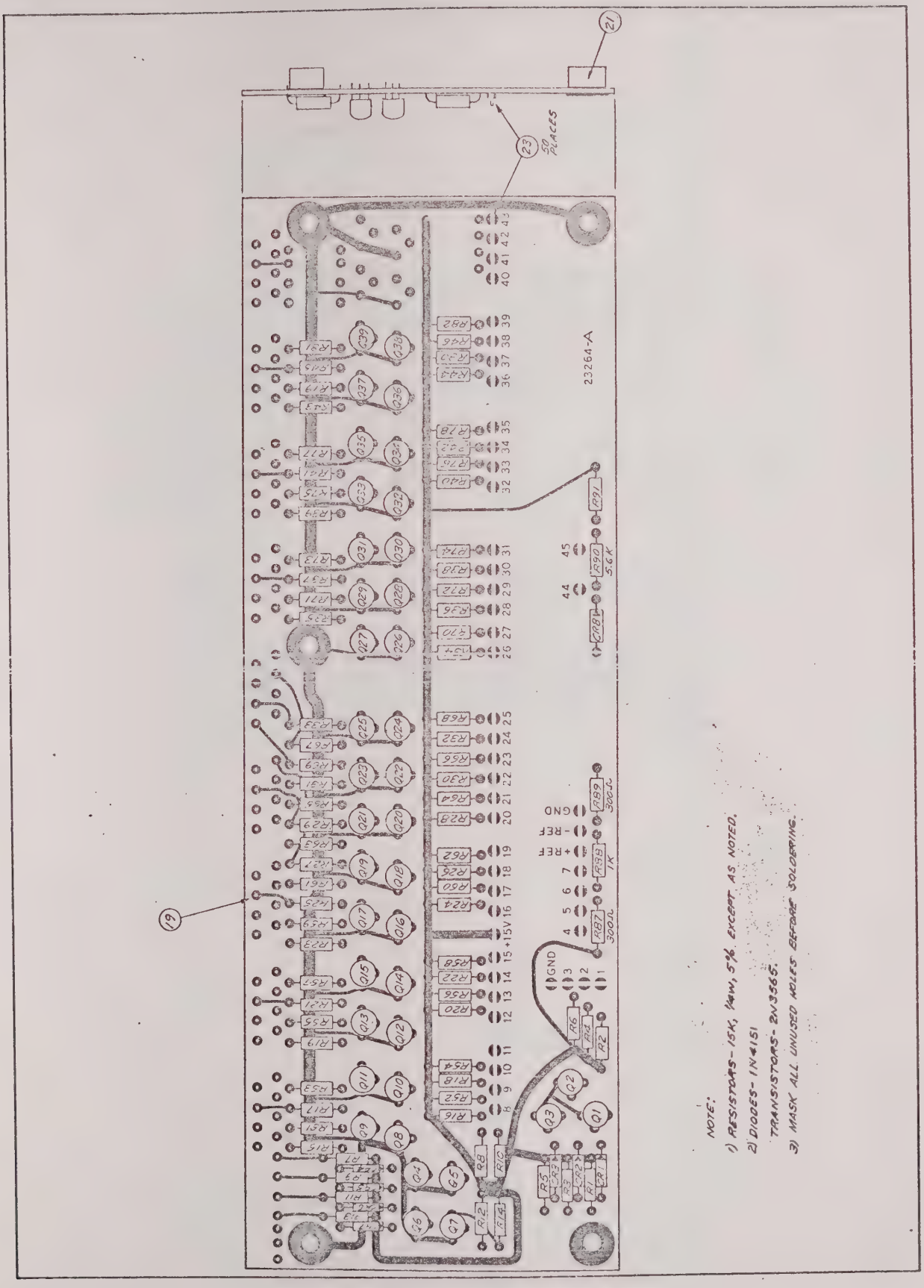


Figure 7-17. D1 Option Assembly (23874)

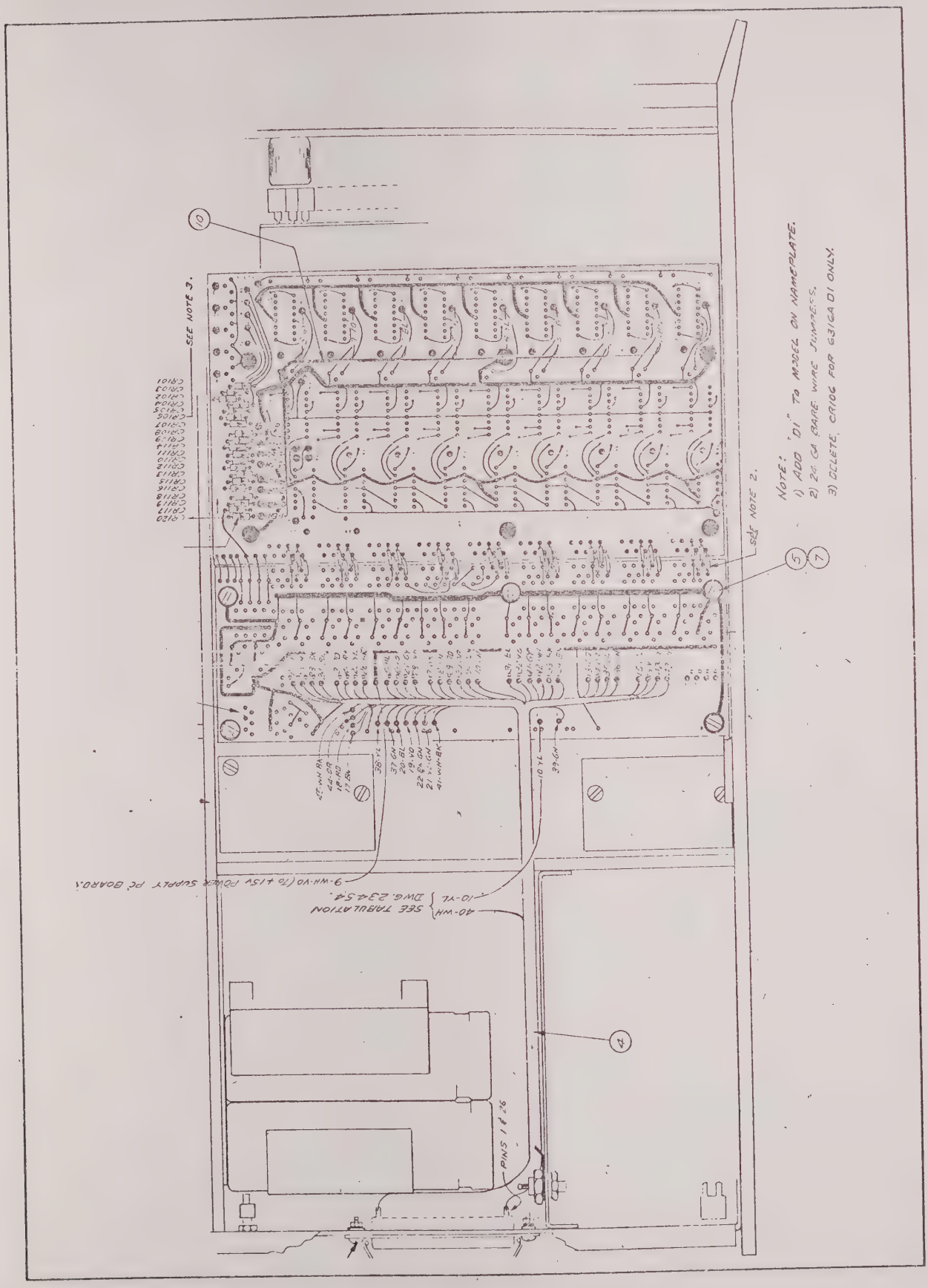


Figure 7-18. D1 Option Final Assembly (23893)

D1 Option P.C. Board Assembly Parts List

| Ref. | Description | SD Part No. | Manufacturers Part No. |
|---|---|---|---|
| | Schematic | 23454 | |
| CR1 Thru CR8 | Diode, IN4151 | CR0150 | |
| | Same as CR1 | | |
| Q1 Thru Q39 | Transistor, 2N3565 | Q0237 | |
| | Same as Q1 | | |
| R1 Thru R46 | Resistor, 15k, 1/4W, 5% | R0728 | |
| | Same as R1 | | |
| R51 Thru R86 | Resistor, 15k, 1/4W, 5% | R0728 | |
| | Same as R51 | | |
| R90 | Resistor, 5.6k, 1/4W, 5% | R0821 | |
| R87 | Resistor, 300Ω, 1/4W, 5% | R0670 | |
| R88 | Resistor, 1k, 1/4W, 5% | R0765 | |
| R89 | Resistor, 300Ω, 1/4W, 5% | R0670 | |
| R91 | Resistor, 15k, 1/4W, 5% | R0728 | |

D1 Option Final Assembly Parts List

| Ref. | Description | SD Part No. | Manufacturers Part No. |
|---|---|---|---|
| CR101 Thru CR120 | Diode, IN4454 | CR0335 | |
| | Same as CR101 | | |
| | Connector, 50 Pin/W Hood | J0171 | |

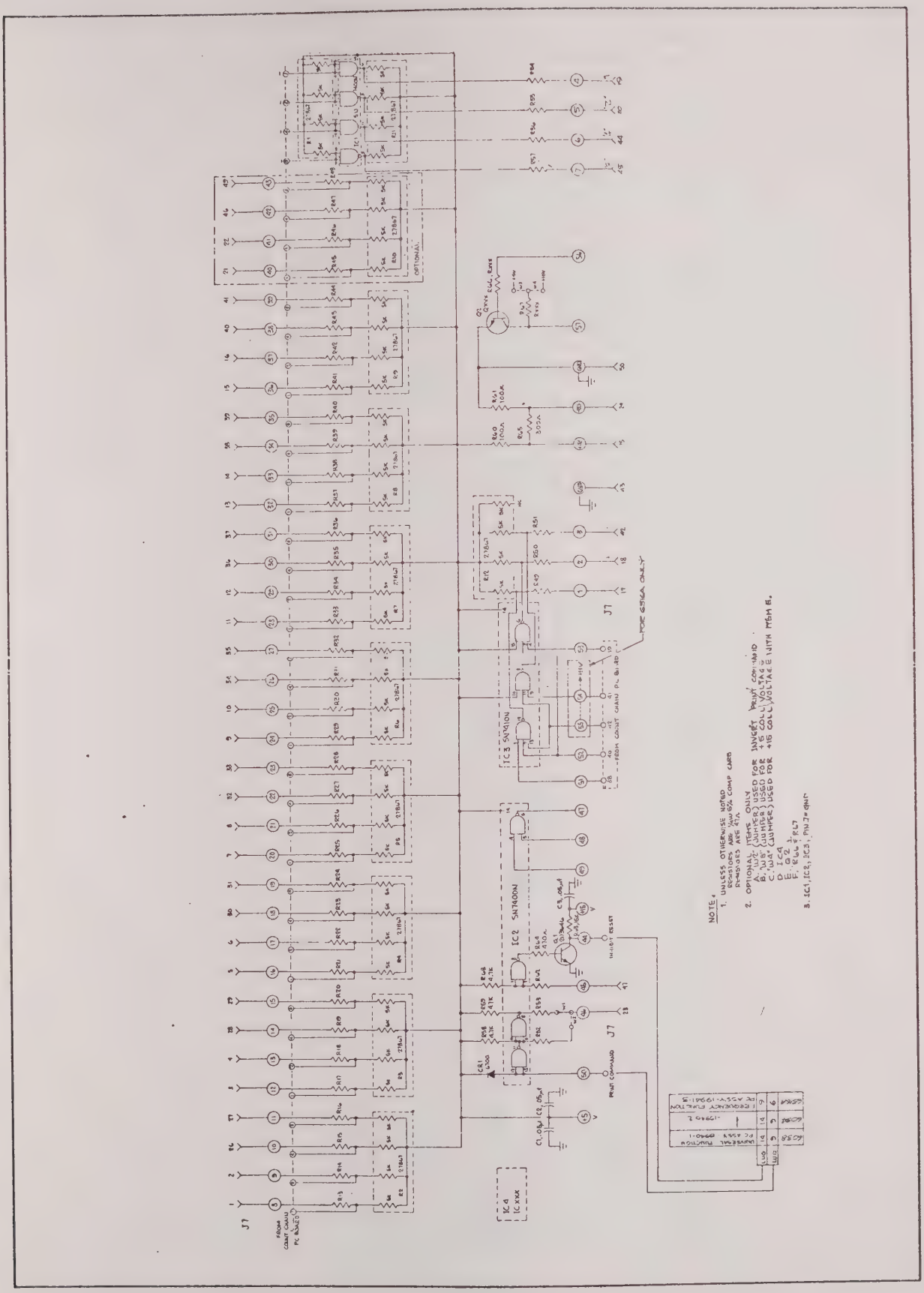

Figure 7-19. D3 Option Schematic (S29436)

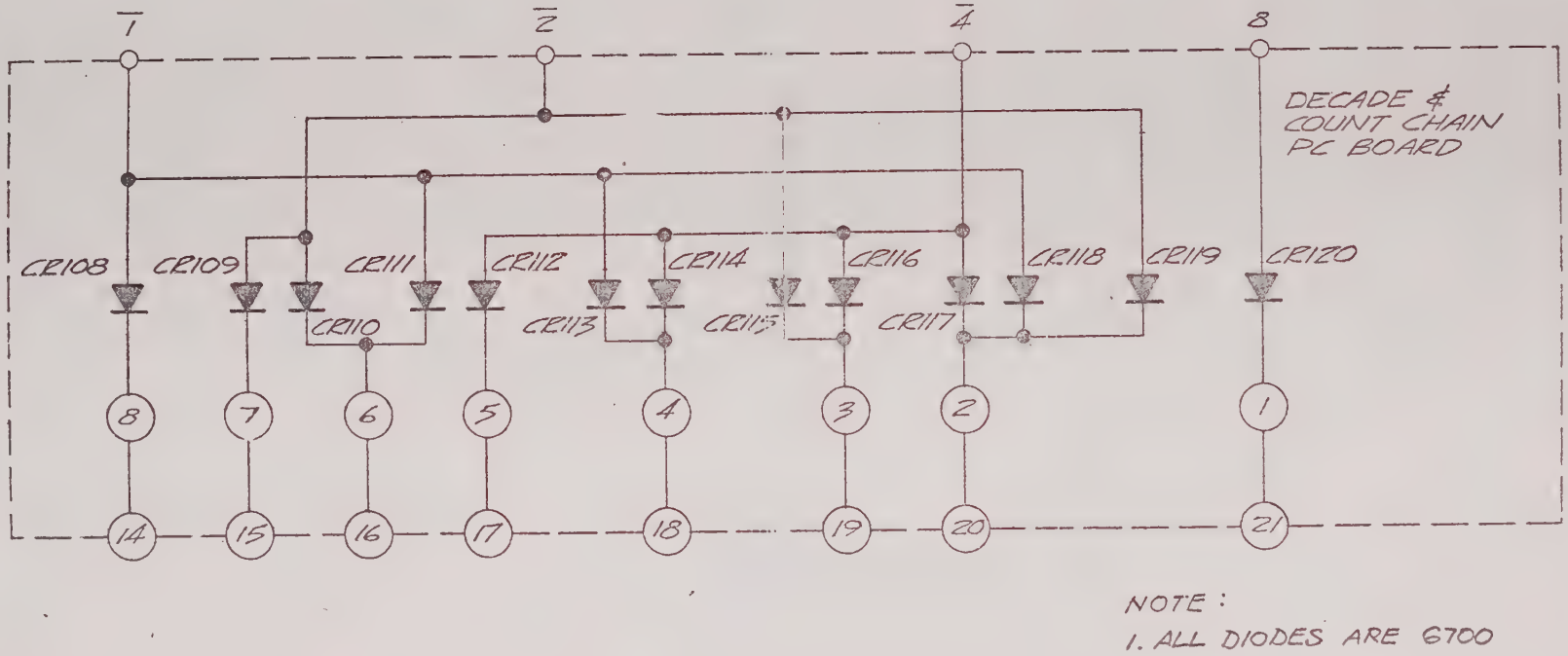


Figure 4-20. D3 Decoding Diodes (S29592)

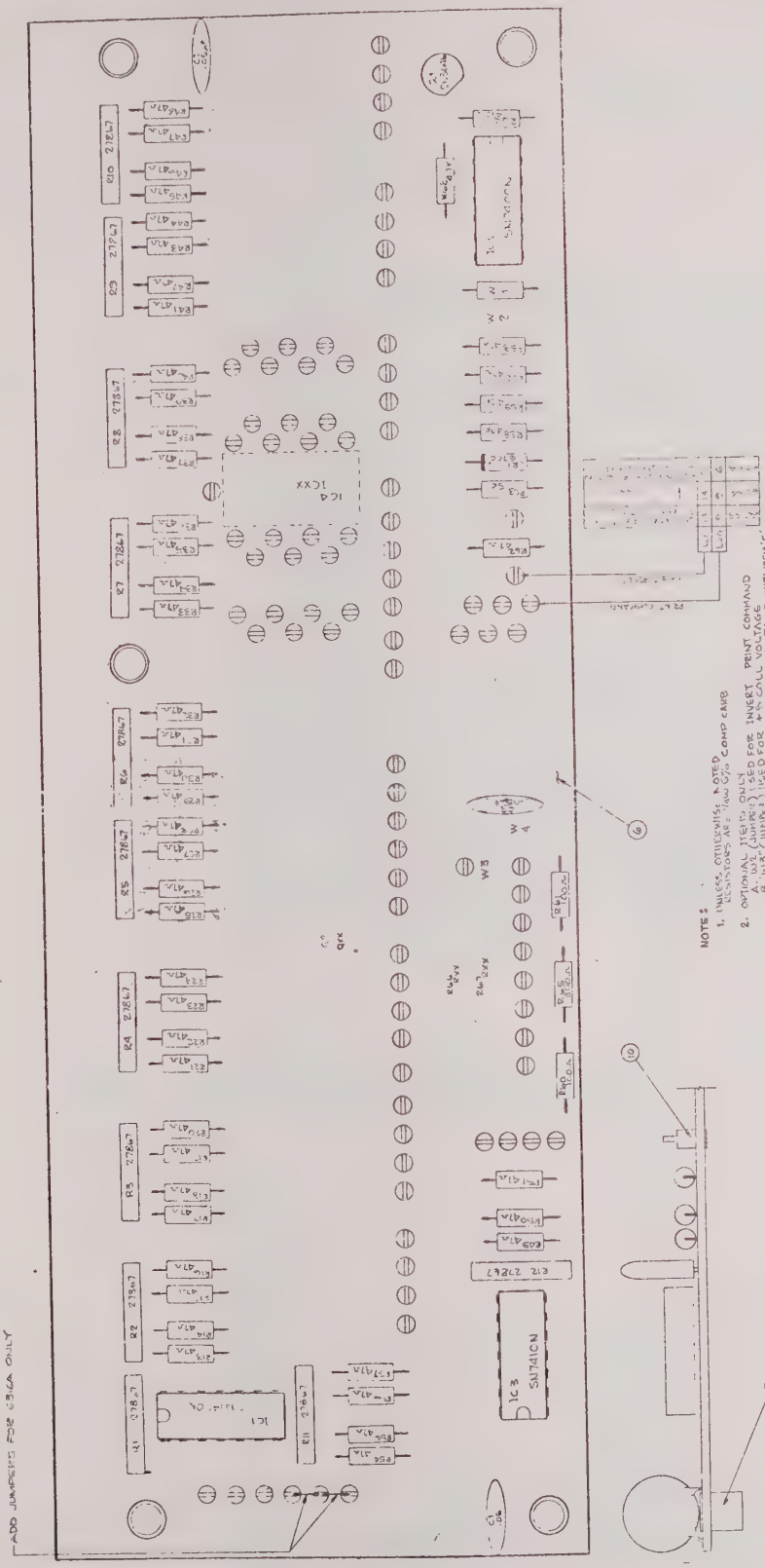


Figure 7-21. D3 Optior P.C. Assembly (S29439)

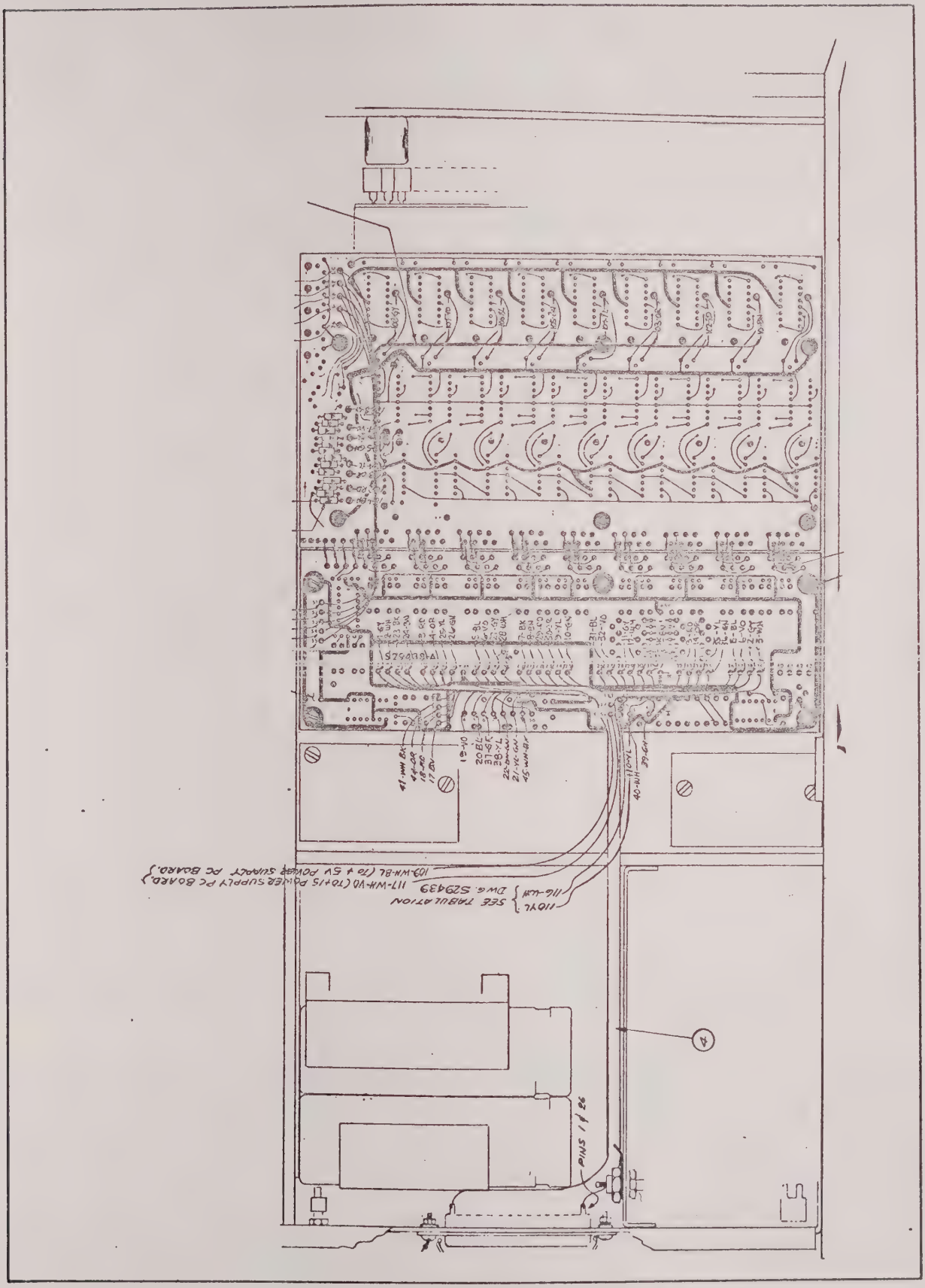


Figure 7-22. D3 Option Final Assembly (S29444)

D3 Option P.C. Board Assembly Parts List

| Ref. | Description | SD Part No. | Manufacturers Part No. |
|---|---|---|---|
| | Schematic | S29436 | |
| CR1 | Diode, 6700 | 6700 | |
| IC1 | Integrated Circuit, SN4700N | 19705 | |
| IC2 | Integrated Circuit, SN4700N | 19705 | |
| Q1 | Transistor, 2N3646 | Q0218 | |
| Q2 | Qxx | | |
| R1 Thru | Resistor, 27867 | 27867 | |
| R12 | Same as R1 | | |
| R13 Thru | Resistor, 47Ω, 1/4W, 5%, cc | R0743 | |
| R57 | Same as R13 | | |
| R58 | Resistor, 4.7k, 1/4W, 5%, cc | R0892 | |
| R59 | Resistor, 4.7k, 1/4W, 5%, cc | R0892 | |
| R60 | Resistor, 100Ω, 1/4W, 5%, cc | R0966 | |
| R61 | Resistor, 100Ω, 1/4W, 5%, cc | R0966 | |
| R62 | Resistor, 47Ω, 1/4W, 5%, cc | R0743 | |
| R63 | Resistor, 15k, 1/4W, 5%, cc | R0728 | |
| R64 | Resistor, 470Ω, 1/4W, 5%, cc | R1044 | |
| R65 | Resistor, 300Ω, 1/4W, 5%, cc | R0670 | |
| R66 | Rxx | | |
| R67 | Rxx | | |
| R68 | Resistor, 4.7k, 1/4W, 5%, cc | R0892 | |
| C1 Thru | Capacitor, .05μF, 50V | C0708 | |
| C3 | Same as C1 | | |

D3 Final Assembly Parts List

| Ref. | Description | SD Part No. | Manufacturers Part No. |
|---|---|---|---|
| CR108 Thru | Diode, 6700 | 6700 | |
| CR120 | Same as CR108 | | |
| | Connector, 50 Pin/W Hood | J0171 | |

# ADDENDUM

## THIN LINE RACK MOUNTING KIT

A kit of loose parts, needed to rack mount this instrument, has been included in the shipping container. Do not discard the container or any packing materials until this kit has been located and its contents verified. The following list may be used to inventory these parts:

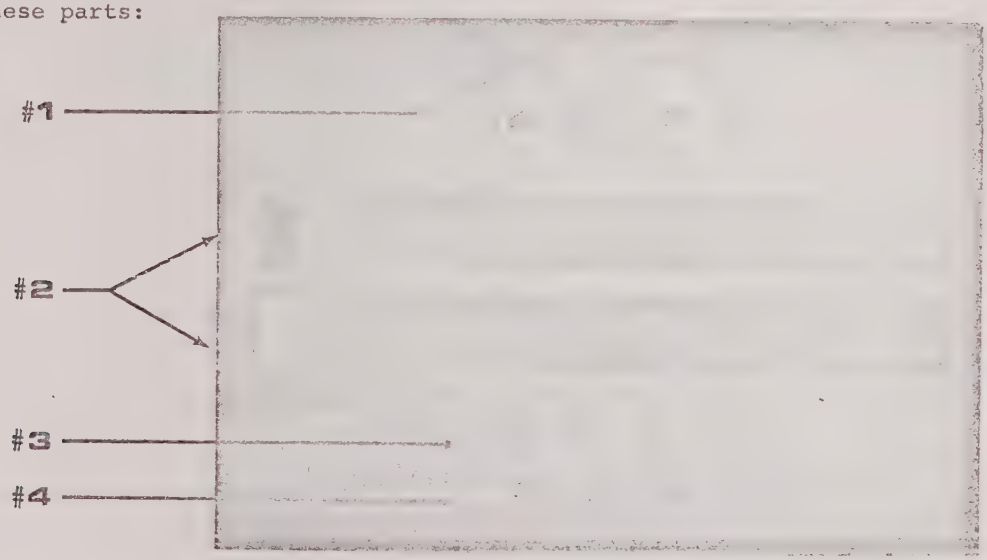


(FIGURE 1)

| | | |
|---|---|---|
| ___ | 2 each Rack Mounting Brackets | Item #1 |
| ___ | 2 each Rack Mounting Adapters | Item #2 |
| ___ | 4 each 8-32 x 3/4" Screws | Item #3 |
| ___ | 4 each #8 Internal Tooth Lockwashers | Item #4 |

Prepare the instrument for rack mounting as follows:

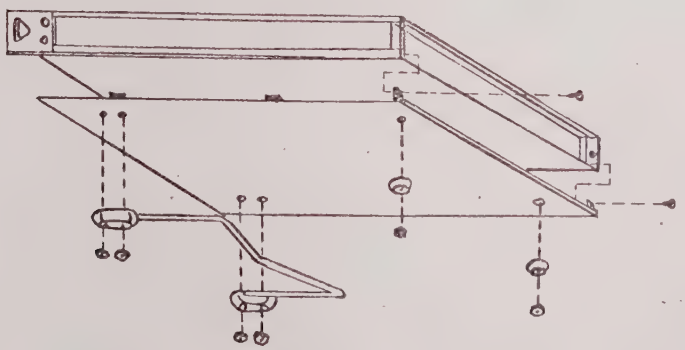

(FIGURE 2)

1. Remove the bottom cover by first removing the 2 hold-down screws on the rear panel, then sliding the cover toward the rear to disengage the hold-down tabs. Lift the cover free.
2. Remove the tilt stand and bumper feet, and store for possible reinstallation later.
3. Replace the bottom cover by reversing the steps in "1" above.

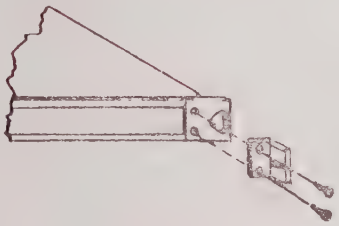

(FIGURE 3)

4. Remove the two screws securing each of the front handles. Do NOT remove the handles.
5. Install the Rack Mounting Brackets (Item #1) over the handles as shown, and secure them with the 3/4" screws and lockwashers provided.
6. Remove the rear edge trim moldings for the side trim panels, and slide the trim panels out. Store both items for possible reinstallation later.

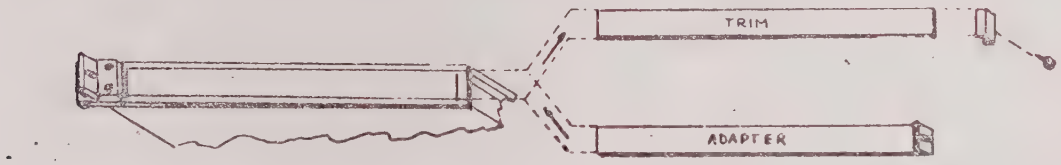


(FIGURE 4)

7. Slide the Rack Mounting Adapters into the spaces vacated by the side trim panels, pointed out flages to the rear and as shown.

# L2 OPTION
# (6000 SERIES)

This option makes the instrument capable of operating from 50-1000 Hz power sources.

The following drawings are part of this option:

| | Assembly | Schematic |
|---|---|---|
| Fan Driver P.C. Assembly | D19778C | C23348C |
| L2 Option Final Assembly | C27359C | |

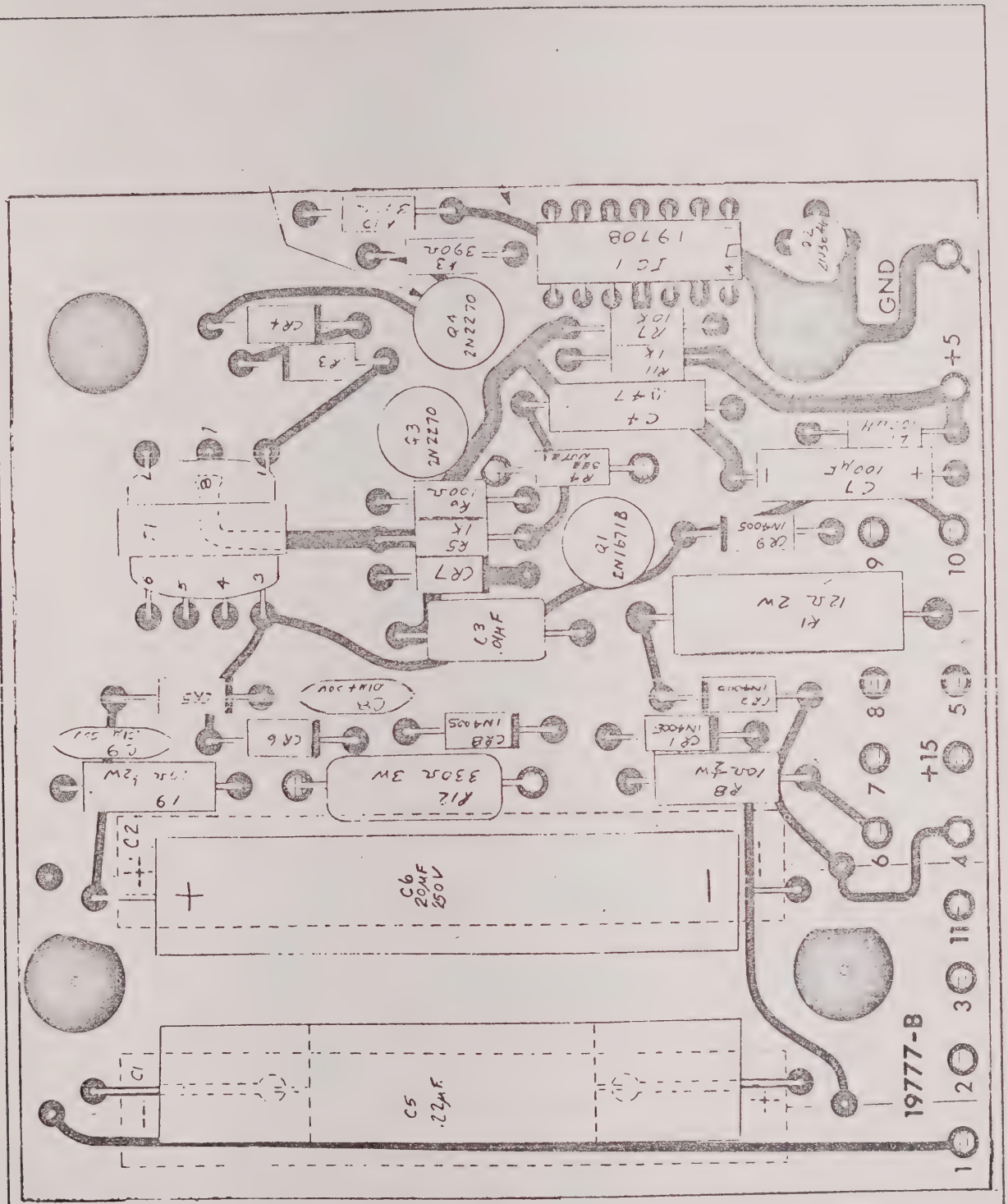


FAN DRIVER P.C. ASSEMBLY D19778C

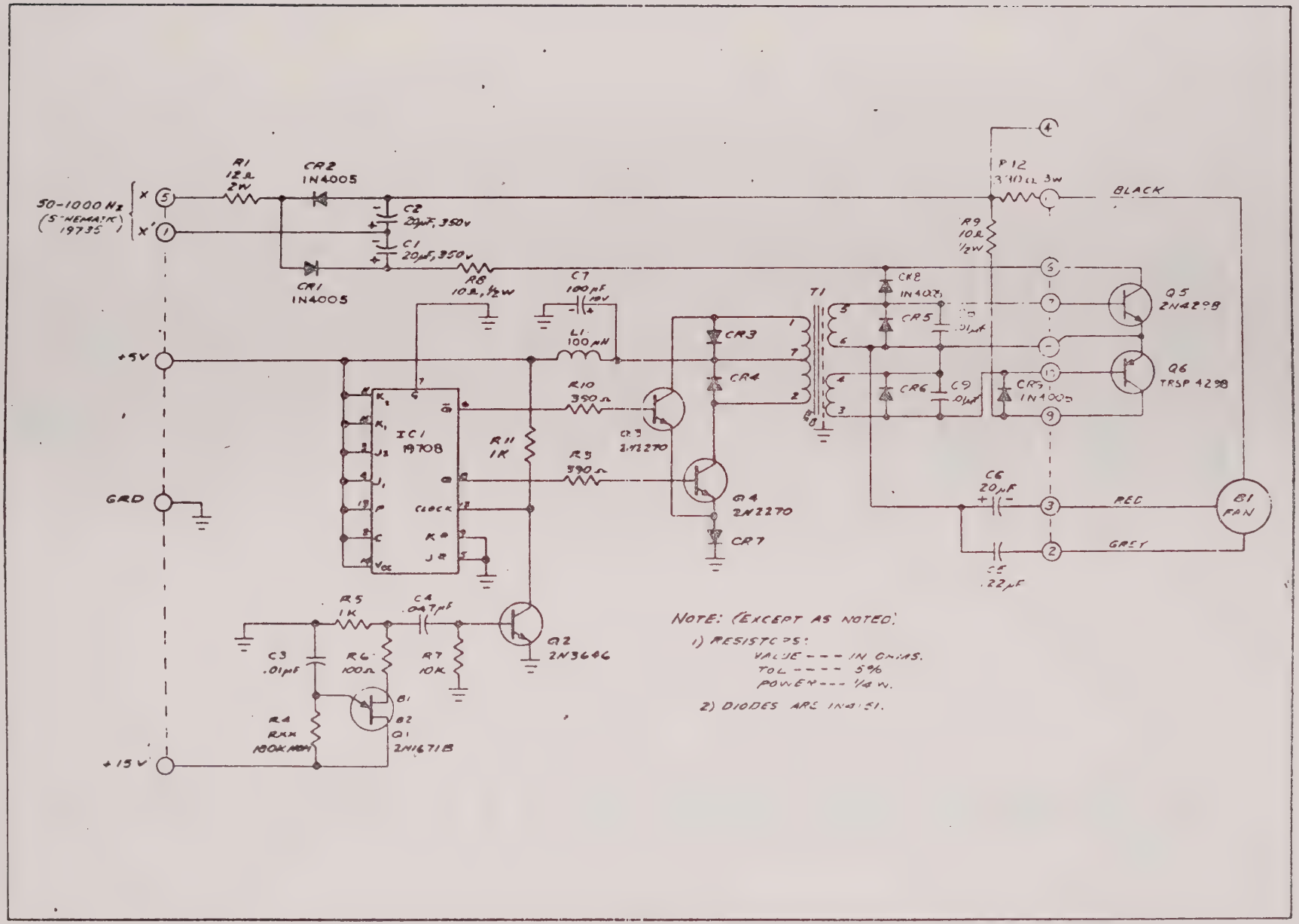


NOTE: (EXCEPT AS NOTED)

1) RESISTORS:
VALUE - - - IN OHMS.
TOL - - - - 5%
POWER - - - ¼ W.

2) DIODES ARE IN4151.

FAN DRIVER P.C. ASSEMBLY SCHEMATIC C23348C

## FAN DRIVER P.C. ASSEMBLY PARTS LIST

| Ref. | Description | SD Part No. |
|---|---|---|
| | Fan Driver P.C. Assembly | D19778C |
| | Fan Driver P.C. Assembly Schematic | C23348C |
| C1 | Capacitor, 20µf, 350V | C1094 |
| C2 | Capacitor, 20µf, 350V | C1094 |
| C3 | Capacitor, .01µf, Mylar | C0852 |
| C4 | Capacitor, .047µf, Mylar | C0700 |
| C5 | Capacitor, .22µf, Metalized | C0565 |
| C6 | Capacitor, 20µf, 250V | C1093 |
| C7 | Capacitor, 100µf, 10V, Tant | C0369 |
| C8 | Capacitor, .01µf, 50V | C0562 |
| C9 | Capacitor, .01µf, 50V | C0562 |
| CR1 | Diode, IN4005 | CR0284 |
| CR2 | Diode, IN4005 | CR0284 |
| CR3 | Diode, IN4151 | CR0150 |
| CR4 | Diode, IN4151 | CR0150 |
| CR5 | Diode, IN4151 | CR0150 |
| CR6 | Diode, IN4151 | CR0150 |
| CR7 | Diode, IN4151 | CR0150 |
| CR8 | Diode, IN4005 | CR0284 |
| CR9 | Diode, IN4005 | CR0284 |
| IC1 | Integrated Circuit | 19708 |
| L1 | Inductor, 100µH | L0073 |
| Q1 | Transistor, 2N1671B | Q0884 |
| Q2 | Transistor, 2N3646 | Q0218 |
| Q3 | Transistor, 2N2270 | Q0102 |
| Q4 | Transistor, 2N2270 | Q0102 |
| R1 | Resistor, 12Ω, 2W, 5% | R2297 |
| R2 | Not Used | |
| R3 | Resistor, 390Ω, 1/4W, 5% | R0880 |
| R4 | Resistor, 180k, 1/4W, 5% | R1042 |
| R5 | Resistor, 1k, 1/4W, 5% | R0765 |
| R6 | Resistor, 100Ω, 1/4W, 5% | R0966 |
| R7 | Resistor, 10k, 1/4W, 5% | R0766 |
| R8 | Resistor, 10Ω, 1/2W, 5% | R1084 |
| R9 | Resistor, 10Ω, 1/2W, 5% | R1084 |

FAN DRIVER P.C. ASSEMBLY PARTS LIST (Con't.)

| Ref. | Description | SD Part No. |
|---|---|---|
| R10 | Resistor, 390Ω, 1/4W, 5% | R0880 |
| R11 | Resistor, 1k, 1/4W, 5% | R0765 |
| R12 | Resistor, 330Ω, 3W | 02413300 |
| T1 | Transformer | 19803 |

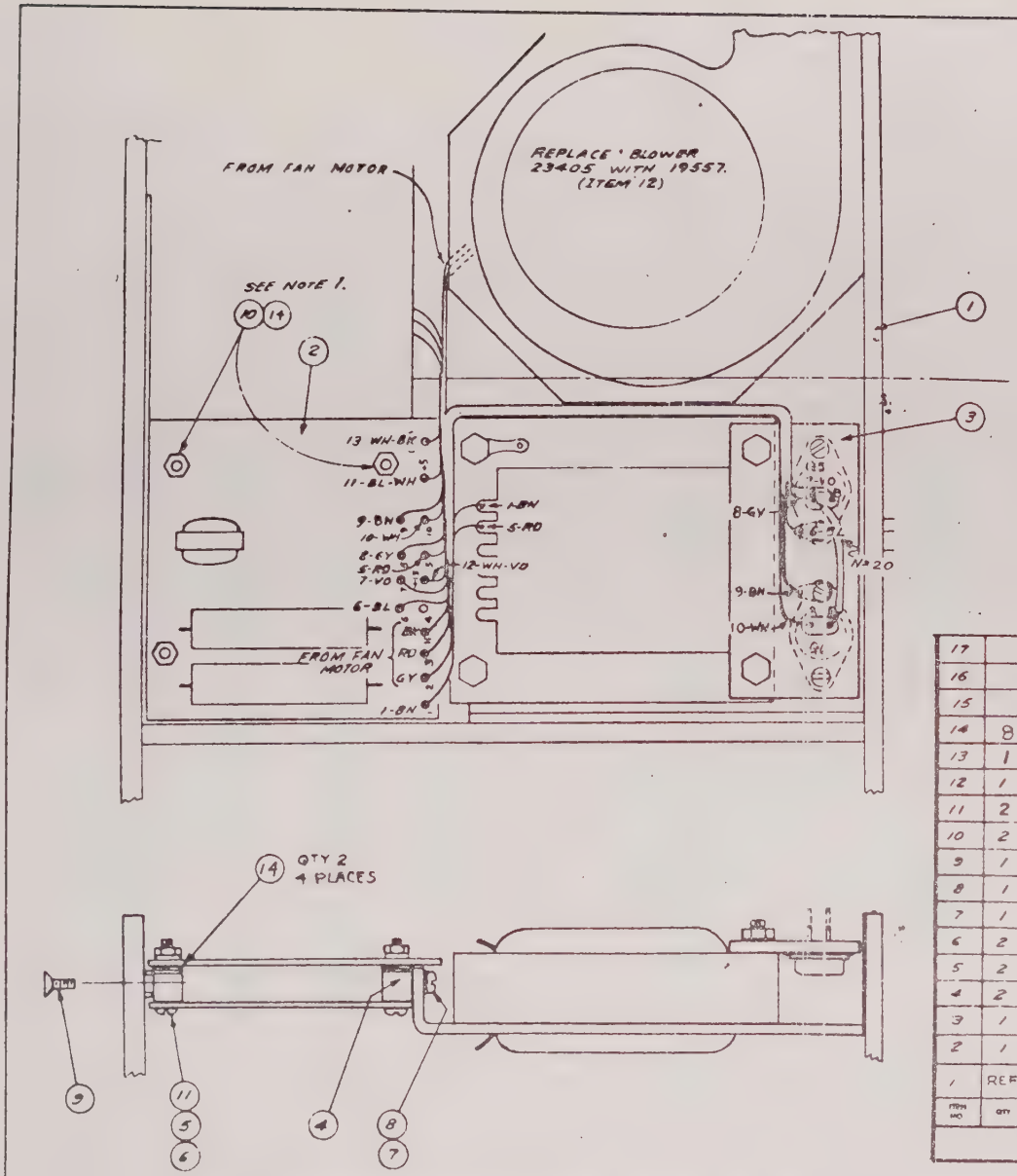


| ITEM NO | QTY | PART NUMBER | DESCRIPTION | SCHEMATIC REF NO |
|---|---|---|---|---|
| 17 | | | | |
| 16 | | | | |
| 15 | | | | |
| 14 | 8 | H 0226 | FIBRE WASHER | |
| 13 | 1 | 27360 | WIRE LIST | |
| 12 | 1 | 19557 | FAN MOTOR | |
| 11 | 2 | H-0286 | SCREW, 4-40 x 3/8 PHMS | |
| 10 | 2 | H-0819 | SCREW, 4-40 x 3/4 PHMS | |
| 9 | 1 | H-0490 | SCREW, 6-32 x 1/4 FHMS | |
| 8 | 1 | H-0986 | SCREW, 6-32 x 1/4 PHMS | |
| 7 | 1 | H-0410 | WASHER, NO 6 SHAKE | |
| 6 | 2 | H-0249 | NUT, 4 40 SMALL | |
| 5 | 2 | H-1282 | WASHER, NO 4 SHAKE | |
| 4 | 2 | 19983 | BLOCK, FAN DRIVER BOARD MOUNTING | |
| 3 | 1 | 27349 | PLATE, TRANSISTOR MTG ASSEMBLY | |
| 2 | 1 | 19779 | FAN DRIVER PC ASSEMBLY | |
| 1 | REF. | ~ | 600C SERIES INSTRUMENT | |

LIST OF MATERIALS

L2 OPTION FINAL ASSEMBLY C27359C

# CHAPTER 8
# SYSTRON-DONNER MODEL 6316B

## 8.1 GENERAL

The Model 6316B measures the frequency of applied signals from DC to 18 GHz using three inputs, 0 to .1 GHz, .1 to .3 GHz and .3 to 18 GHz. Operation is automatic with proper selection of switch settings. The following discussion covers the differences between the 6316A and 6316B and references material in the Model 6316A manual which is applicable to the Model 6316B.

## 8.2 MODEL 6316B ADDITIONS

In order to extend the frequency from 12.4 GHz to 18 GHz, a new broad band Input Power Divider has been installed. New higher frequency mixers have been installed and a Mixer-Driver Amplifier added to make the new mixer compatible to the existing ACTO* circuitry.

## 8.3 ALIGNMENT

Procedures contained in Chapter 5, Maintenance and Repair, are applicable to the Model 6316B. Alignment of the Mixer Driver Amplifier is as follows:

1) Connect the oscilloscope horizontal input to TP2 on the ACTO* P.C. Assembly.

2) Connect the oscilloscope vertical input to lug #4 on the ACTO* P.C. Assembly with DC coupling and 1 mV/01 V.

3) Adjust C11 and C12 on the Driver Amplifier P.C. Assembly for a maximum negative linear voltage on lug #4.

4) Connect the oscilloscope vertical input to lug #5 on the ACTO* P.C. Assembly.

5) Adjust C5 and C6 on the Driver Amplifier P.C. Assembly for a maximum negative linear voltage on lug #5.

*ACTO ® Systron-Donner Corp.

## 8.4 APPLICABLE MATERIAL

The following 6316A material is applicable to the 6316B.

1) Chapter 1, Paragraph 1.1, all material is applicable to 6316B, however, the range of the 6316B has been extended to 18 GHz. Chapter 1. Paragraph 1.2, Specifications; to the specifications the following should be added.

   a) Sensitivity

| | |
|---|---|
| .3 GHz to 12.4 GHz | 100 mV |
| 12.4 GHz to 18 GHz | 160 mV |

2) Chapter 2 is applicable in its entirety.

3) Chapter 3 is applicable in its entirety, however, the initial functional test information for the 12.4 GHz to 18 GHz range has been added in Paragraph 8.5.

4) Chapter 4, Principle of Operation, is applicable to the Model 6316B. Circuit descriptions of the new Input Divider, Mixers and Mixer Driver Amplifier will be found in Paragraph 8.6. Figure 4-1 is not applicable to the Model 6316B.

5) Chapter 5, Maintenance and Repair, is applicable to the Model 6316B.

6) Chapter 6, Drawings and Parts Lists, is applicable to the Model 6316B. Additional drawings and parts lists will be found in this chapter.

7) Chapter 7, Options, all options are available for the Model 6316B.

## 8.5 INITIAL FUNCTIONAL TEST

In addition to those functional tests listed in Chapter 3, the following procedure is for testing the 12.4 GHz to 18 GHz range.

On the front panel:

1. Move the RESOLUTION Hz switch to the "100" position.
2. Move the RANGE switch to the "3-18" position.
3. Turn the RECYCLE-RATE control fully cw for minimum display time.
4. Turn the LEVEL-SENSITIVITY control fully ccw but not into the PREset detent position.

5. Apply a 12.4 to 18 GHz signal to the .3-18 GHz input connector. Adjust the signal level input to at least 160 mV (observe signal level precautions outlined in Chapter 1, Paragraph 1.3).
6. Turn the SENSITIVITY control cw until the "LOK" indication appears on the center annunciator panel, followed by a display of a correct measurement of the applied signal.
7. Turn the SENSITIVITY control ccw. Observe the loss of the "LOK" indication and eventual loss of the display (all digits return to zero).
8. Slowly turn the LEVEL-SENSITIVITY control cw. Observe reaquisition of the "LOK" indicator at some point, followed by a redisplay of the correct measurement.
9. If the instrument fails to respond, check that the level of the input signal is at least 160 mV.

## 8.6 CIRCUIT DESCRIPTIONS, DRAWINGS AND PARTS LISTS

### 8.6.1 Drawings and Parts Lists

| | | |
|---|---|---|
| 39035 | Figure 8-1 | U1, Power Divider |
| 39316 (Sht 1) | Figure 8-2 | Final Assembly Model 6316B |
| 39316 (Sht 2) | Figure 8-3 | Final Assembly Model 6316B |
| 39316 | --- | Final Assembly Parts List |
| 39263 | Figure 8-4 | Front Panel Assembly Model 6316B |
| 39263 | --- | Front Panel Assembly Parts List |
| 39264 | Figure 8-5 | Block Diagram Model 6316B |
| 39733 | Figure 8-6 | Mixer Assembly |
| 39796 | Figure 8-7 | Schematic Mixer Assembly |
| 39733 | --- | Mixer Assembly Parts List |
| 39795 | Figure 8-8 | Driver Amplifier P.C. Assembly |
| 39792 | Figure 8-9 | Schematic Driver Amplifier P.C. Assembly |
| 39795 | --- | Driver Amplifier P.C. Assembly Parts List |

### 8.6.2 Mixer Assembly Circuit Description, Schematic #39796

The Mixer Assembly generates harmonics of the ACTO*, up to the 180th, and mixes these with the unknown input frequency.

The automatic transfer oscillator signal is applied to CR1, C1, C2, and step-recovery diode CR2. The positive portion of the signal drives the anode of CR2. When the voltage reverses, CR2 continues to conduct for a time. When it finally stops conducting, it does so very abruptly, causing a voltage transient across L1 and R1. A positive pulse is generated and coupled to mixer diode CR3, through C3.

A very fast pulse, approximately 4 volts in amplitude and 150 ps at the baseline, represents harmonics of the automatic transfer oscillator. This pulse is mixed with the incoming frequency to produce an IF at J3.

The mixer is used in both the "N" channel and LOCK channel.

### 8.6.3 Driver Amplifier Circuit Description, Schematic #39792

The Driver Amplifier Assembly is a buffer amplifier, with a gain of less than one, which matches the mixers to the ACTO* circuitry.

The incoming N channel IF signal is coupled to the base of Q1 through C1. CR1 is reverse biased during the positive portion of the signal. During the negative portion of the signal, CR1 is forward biased and the negative portion of the signal is coupled to the Q1 emitter.

Output is coupled through C4 to the 1 MHz bandpass filter C5, L3, and C6, to the ACTO* assembly. L2, C3, L1, and C2 filter the 1 MHz signal out of the +5 V dc power circuit.

The LOCK channel operates in the same manner.

## 8.6.4 U1, Power Divider Circuit Description, Final Assembly #C39035

The 50 Ω, 200 MHz-18 GHz power divider input accepts signals in the high frequency range and resistively divides the power into two isolated outputs (6 dB loss per channel). The signal from each part is then fed to Mixer Assembly #39733. This unit requires no maintenance and under normal conditions should never be opened for inspection.

FIGURE 8.1 U1, POWER DIVIDER

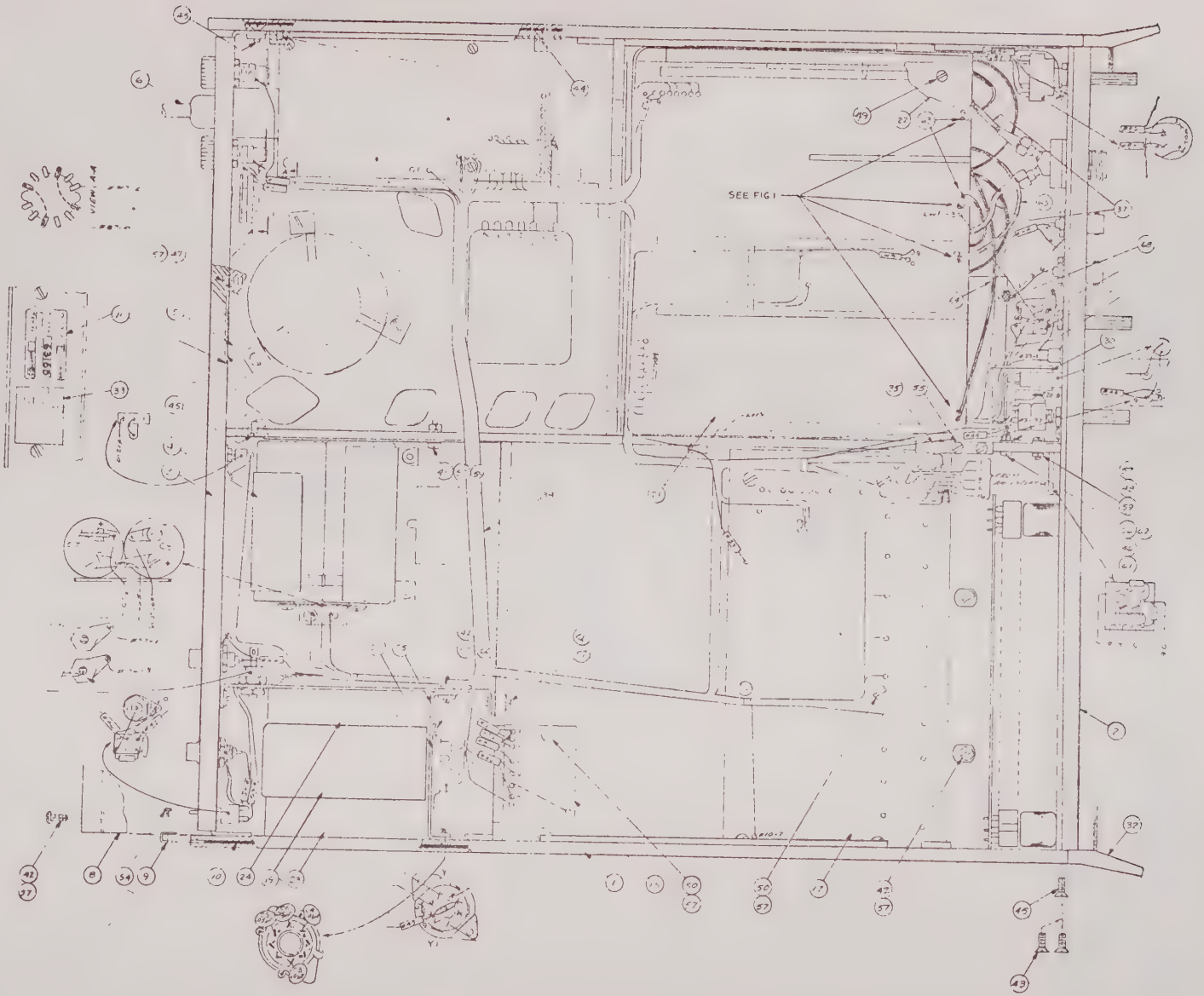


FIGURE 8-2 FINAL ASSEMBLY MODEL 6316B #39316
(SHEET 1 OF 2)

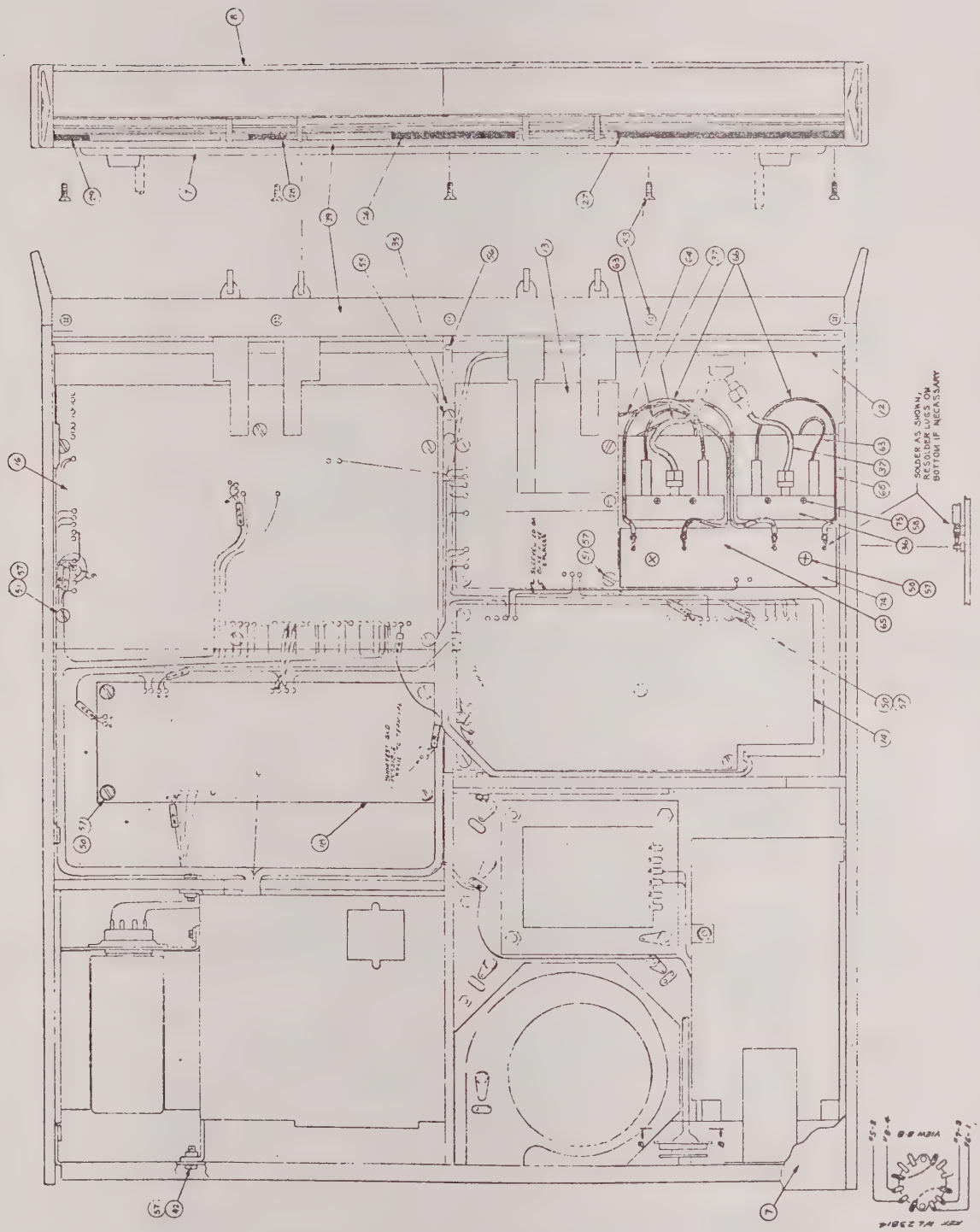


FIGURE 8-3 FINAL ASSEMBLY MODEL 6316B #39316
(SHEET 2 OF 2)

# PARTS LIST
## FINAL ASSEMBLY #39316

| REF. | DESCRIPTION | SD PART NO. | QTY. |
|---|---|---|---|
| 1 | Assembly, chassis, finish | 23232 | 1 |
| 2 | Assembly, panel, front | 39263 | 1 |
| 3 | Assembly, panel, rear | 19936 | 1 |
| 4 | Assembly, chassis, auxiliary | 23479 | 1 |
| 5 | Assembly, Power Supply | 19734 | 1 |
| 6 | Cord, line, ac | W0076 | 1 |
| 7 | Assembly, cover, bottom | 23301 | 1 |
| 8 | Assembly, cover, top | 23056 | 1 |
| 9 | Retainer, strip, trim | 23085 | 2 |
| 10 | Trim, side | 23086 | 2 |
| 11 | Nameplate | 23456 | 1 |
| 12 | Assembly, detent, switch | 23343 | 1 |
| 13 | Assembly, P.C., 100 MHz Input Amp | 39029 | 1 |
| 14 | Assembly, P.C., 100 MHz Amp & Decade | 33288 | 1 |
| 15 | Assembly, P.C., 1 MHz | 19943 | 1 |
| 16 | Assembly, P.C., Frequency Function | 19941-3 | 1 |
| 17 | Assembly, P.C., 9 digit | 19939 | 1 |
| 18 | Assembly, P.C., 300 MHz Prescaler | 25189 | 1 |
| 19 | Oscillator | Y0023 | 1 |
| 20 | Socket, octal, 8 pin | X0004 | 1 |
| 21 | Assembly, P.C., ACTO | 23733 | 1 |
| 22 | Shield, ACTO board | 23818 | 1 |
| 23 | Absorber, shock | 23656-2 | 1 |
| 24 | Absorber, shock | 23656-1 | 1 |
| 25 | Bracket, mounting, oscillator | 23029 | 1 |
| 26 | Spacer, panel, front | 23237-6 | 1 |
| 27 | Spacer, panel, front | 23237-4 | 1 |
| 28 | Spacer, panel, front | 23237-2 | 1 |
| 29 | Spacer, panel, front | 23237-1 | 1 |
| 30 | Shield, light, gate | 23753 | 1 |
| 31 | Screwdriver (not shown) | H1135 | 1 |
| 32 | Handle | 19990 | 2 |
| 33 | RFI Screen, panel, rear | 25226 | 1 |
| 34 | Harness, cable, main | 25638 | 1 |
| 35 | Retainer, cover | 23812 | 2 |
| 36 | Assembly, mixer | 39733 | 2 |
| 37 | Assembly, cable, mixer input | 25256 | 2 |
| 39 | Trim, panel, front | 19996 | 1 |
| 41 | Screw, PHMS, 6-32 X 1/2 | H0990 | 6 |
| 42 | Screw, PHMS, 6-32 X 3/8 | H0989 | 14 |

## PARTS LIST

### FINAL ASSEMBLY #39316 (Cont'd)

| REF. | DESCRIPTION | SD PART NO. | QTY. |
|---|---|---|---|
| 43 | Screw, FHMS, 8-32 X 3/8 | H1777 | 4 |
| 44 | Screw, FHMS, 6-32 X 5/16 | H0287 | 2 |
| 45 | Screw, FHMS, 6-32 X 3/8 | H0379 | 8 |
| 46 | Screw, 2-56 X 1/4 | H1112 | 2 |
| 47 | Screw, PHMS, 6-32 X 5/16 | H0284 | 4 |
| 48 | Screw, BHMS, 6-32 X 1/4 | H0397 | 1 |
| 49 | Screw, FHMS, 6-32 X 3/4 | H0394 | 9 |
| 50 | Screw, PHMS, 6-32 X 7/16 | H1697 | 19 |
| 51 | Screw, PHMS, 6-32 X 9/16 | H1696 | 10 |
| C2 | Capacitor, .01 µF, 100 V | C0556 | 1 |
| C3 | Capacitor, .01 µF, 500 V, Disc | C0423 | 1 |
| C4 | Capacitor, .01 µF, 500 V, Disc | C0423 | 1 |
| C5 | Capacitor, .05 µF, 100 V, Disc | C0708 | 1 |
| C6 | Capacitor, .05 µF, 100 V, Disc | C0708 | 1 |
| 53 | Screw, FHMS, 4-40 X 3/8 | H0745 | 5 |
| 54 | Screw, PHMS, 4-40 X 3/16 | H1186 | 2 |
| 55 | Screw, FHMS, 4-40 X 1/4 | H0378 | 4 |
| 56 | Screw, set, cup pt, 4-40 X 3/16 | H0135 | 1 |
| 57 | Washer, #6, internal tooth | H0410 | 49 |
| 58 | Washer, #2, internal tooth | H0610 | 6 |
| 59 | Nut, 6-32 | H0470 | 4 |
| 60 | Rivet, 1/8 X 1/8, semi tubular | H0404 | 2 |
| 61 | Standoff | E0140 | 2 |
| 62 | Lug, solder, #2 | H0541 | 1 |
| 63 | Assembly, cable, mixer output | 39870 | 2 |
| 64 | Assembly, cable, mixer output | 39870 | 1 |
| 65 | Assembly, cable, mixer output | 39870 | 1 |
| 66 | Assembly, cable, mixer output | 39870 | 2 |
| 68 | Bead, ferrite | H0654 | 1 |
| 73 | Assembly, kit, mount, rack | 33856 | 1 |
| 74 | Assembly, P.C., Driver Amplifier | 39795 | 1 |
| 75 | Screw, PHMS, 2-56 X 3/4 | H1241 | 4 |

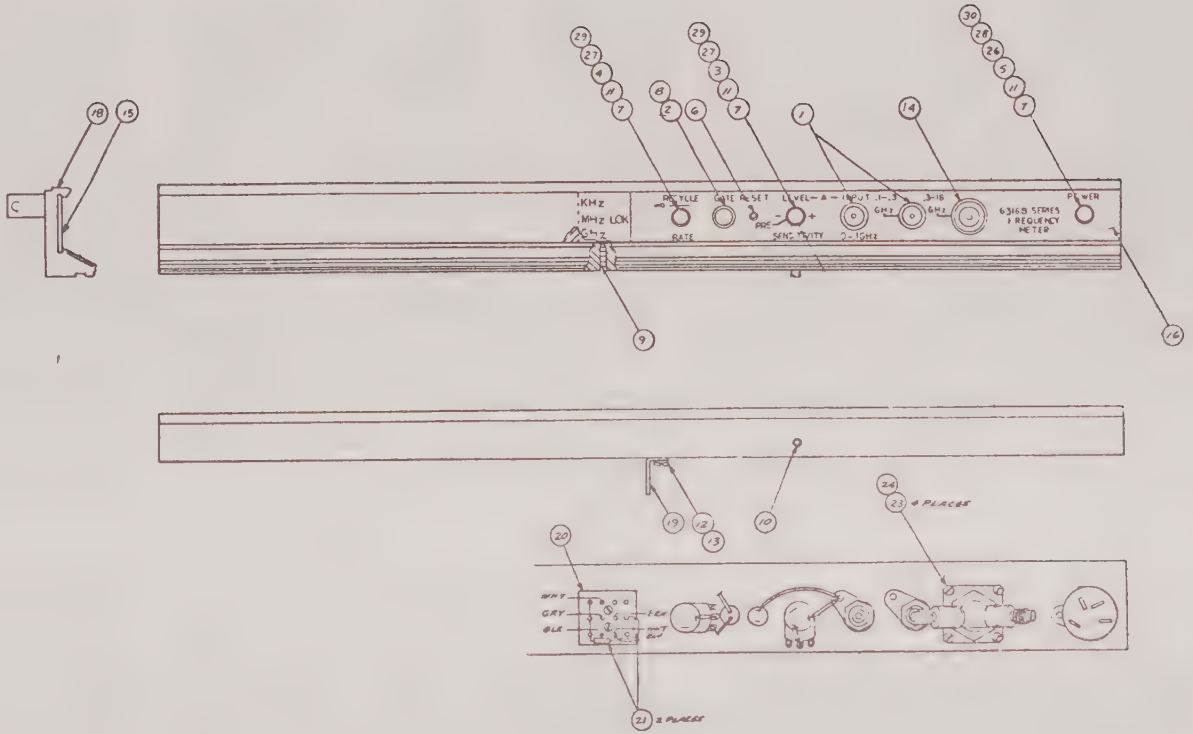


FIGURE 8-4 FRONT PANEL ASSEMBLY #39263 REV. B

# PARTS LIST

## FRONT PANEL ASSEMBLY #39263

| REF. | DESCRIPTION | SD PART NO. |
|---|---|---|
| 1 | Connector, BNC | J0260 |
| 2 | Indicator | I0074 |
| 3 | Pot & Switch, 5 k, SPDT | R2308 |
| 4 | Pot & Switch, 2 M, SPST | R2314 |
| 5 | Switch | S0328 |
| 6 | Switch, with shake | S0160 |
| 7 | Knob, round | 23101 |
| 8 | Nut, speed, Tinnerman | I0040 |
| 9 | Screw, set, cup point, #4-40 X 3/8 | H0242 |
| 10 | Screw, set, cup point, #10-32 X 3/8 | H1584 |
| 11 | Screw, set, flat point, #4-40 X 3/32 | H1309 |
| 12 | Screw, BHMS, 6-32 X 1/4 | H0397 |
| 13 | Washer, internal tooth, #6 | H0410 |
| 14 | Divider, power | 39035 |
| 15 | Window, polarized | 19994 |
| 16 | Plate, dress, panel, front | 39036 |
| 18 | Panel, front | 19995-2 |
| 19 | Panel, angle | 23349 |
| 20 | Assembly, annunciator | 23004-2 |
| 21 | Resistor, 27 Ω, 5%, 1/4 W | R1548 |
| 23 | Screw, #4-40 X 1/4 | H0440 |
| 24 | Washer, #4, shakeproof | H0959 |
| 26 | Nut, 3/8-32 | H0466 |
| 27 | Nut, 1/4-32 | H0531 |
| 28 | Lug, gnd, 3/8 | E0137 |
| 29 | Washer, 1/4 shakeproof | H0742 |
| 30 | Washer, 3/8 shakeproof | H0507 |

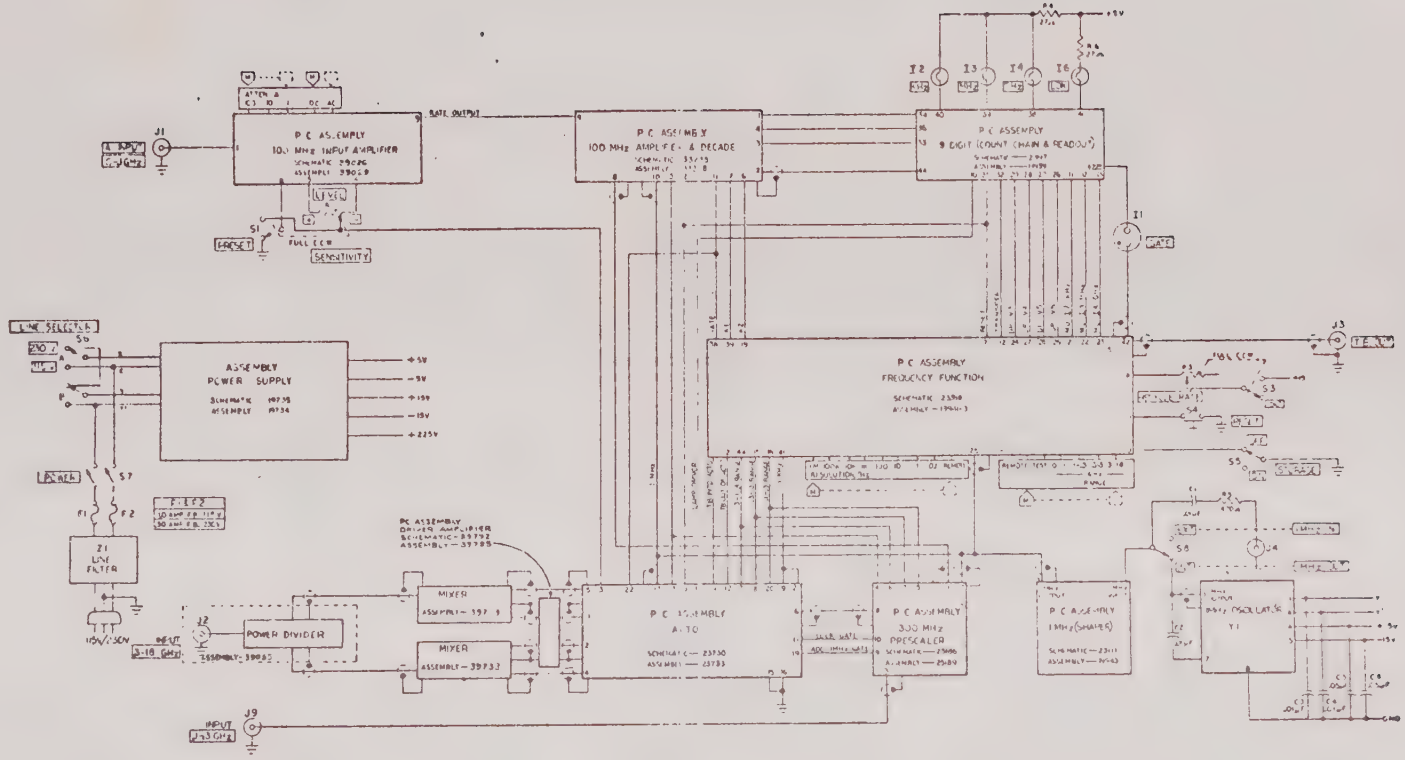


FIGURE 8-5 BLOCK DIAGRAM MODEL 6316B

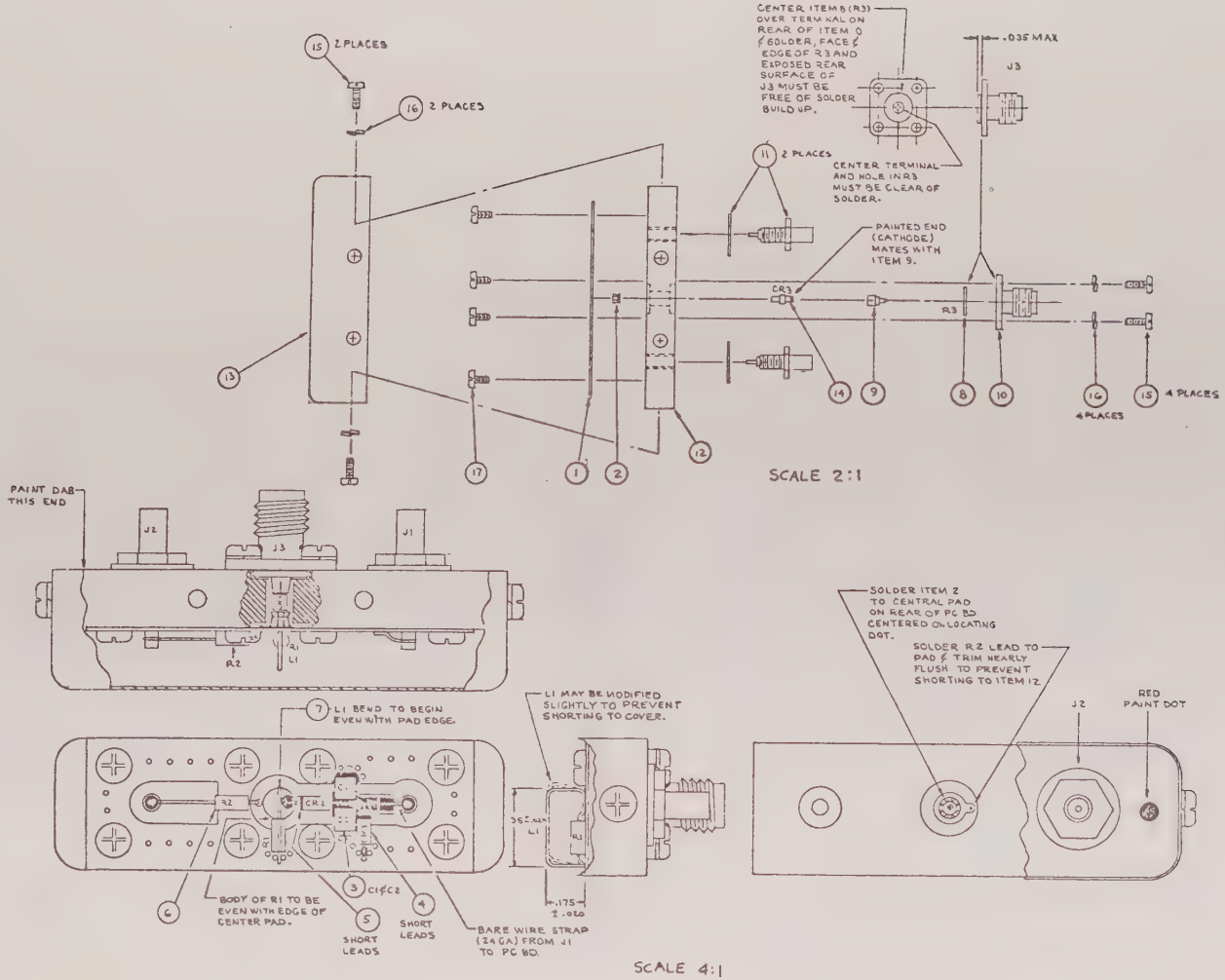


FIGURE 8-6 MIXER ASSEMBLY #39733 REV. A

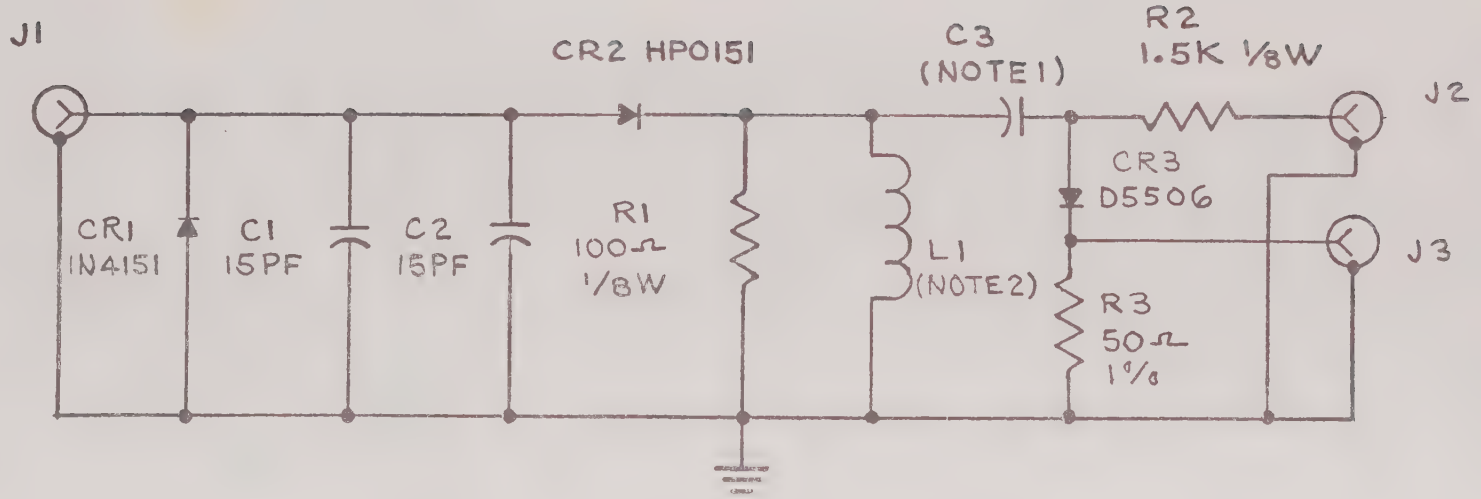


NOTES
1) C3 IS PATTERN ON PC BD
2) L1 IS LEAD ON R1

FIGURE 8-7 MIXER ASSEMBLY SCHEMATIC #39796

## PARTS LIST

## MIXER ASSEMBLY #39733

| REF. | DESCRIPTION | SD PART NO. |
|---|---|---|
| 2 | Clip, diode | 39731 |
| C1 | Capacitor, 15 pF, Chip | C1163 |
| C2 | Capacitor, 15 pF, Chip | C1163 |
| CR1 | Diode, 1N4151 | CR0150 |
| CR2 | Diode, HP0151 | CR0269 |
| CR3 | Diode, D5506 | CR0334 |
| J1 | Connector, RF | J0625 |
| J2 | Connector, RF | J0625 |
| J3 | Connector, mod | 39729 |
| R1, L1 | Resistor, 100 Ω, 5%, 1/8 W | R1441 |
| R2 | Resistor, 1.5 k, 5%, 1/8 W | R2463 |
| R3 | Resistor, 50 Ω, 1%, Disc, Pyrofilm | R2873 |
| 9 | Probe, resistor | 39730 |
| 12 | Block, mixer | 39722 |
| 13 | Cover, mixer | 39732 |
| 15 | Screw, 2-56 X 3/16 | H0946 |
| 16 | Washer, Lock #2 | H0481 |
| 17 | Screw, #2-56 X 1/8 | H0971 |
| 18 | Schematic, Mixer Assembly | 39796 |

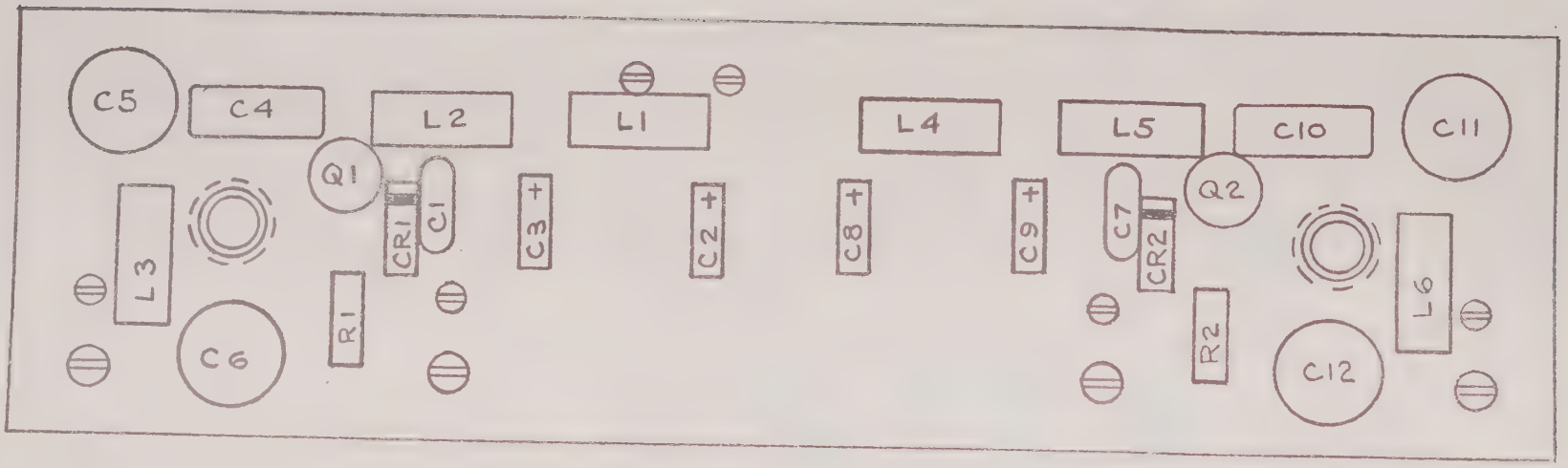


FIGURE 8-8 DRIVER AMPLIFIER P.C. ASSEMBLY #39795

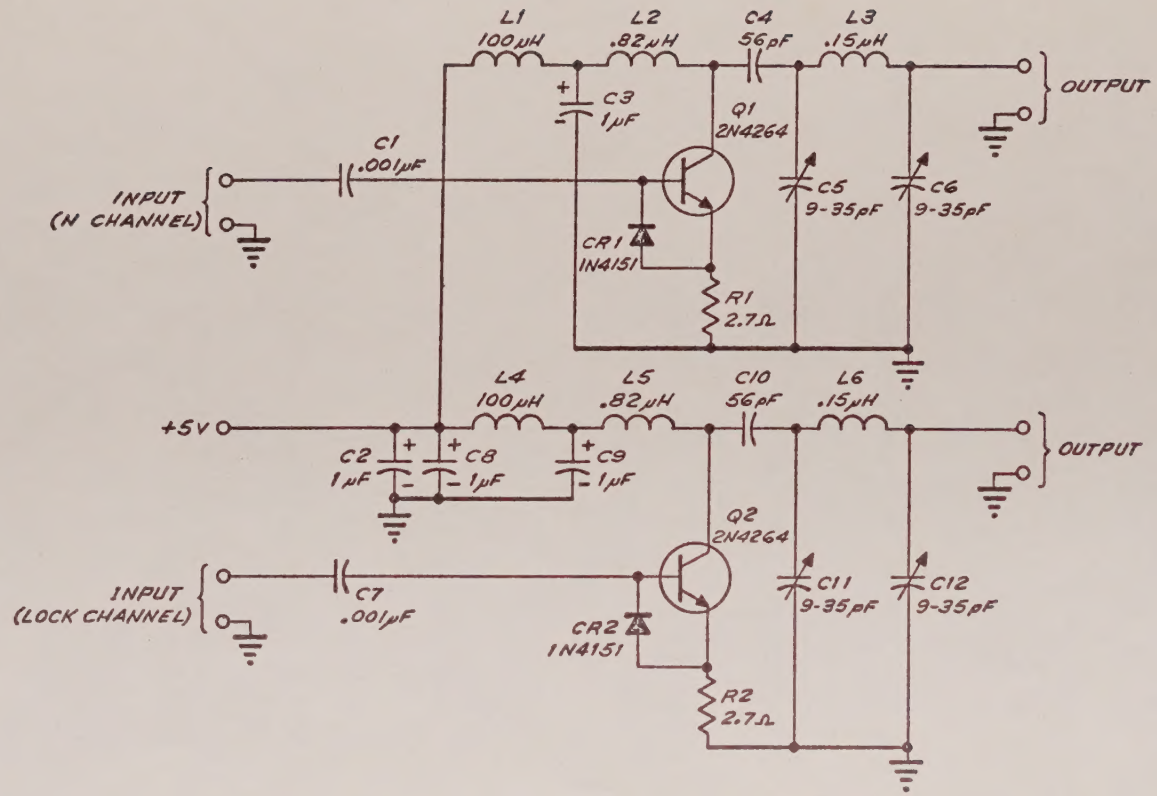


FIGURE 8-9 SCHEMATIC DRIVER AMPLIFIER P.C. ASSEMBLY

# PARTS LIST
## DRIVER AMPLIFIER P.C. ASSEMBLY #39795

| Ref. | Description | S-D Part No |
|---|---|---|
| | Driver Amplifier, P.C. Assembly | 39795 |
| | Schematic, Driver Amplifier P.C. Assembly | 39792 |
| C1 | Capacitor, .001 µF, 1 kV, Disc | C0235 |
| C2 | Capacitor, 1 µF, 35 V, Tant | C0524 |
| C3 | Capacitor, 1 µF, 35 V, Tant | C0524 |
| C4 | Capacitor, 56 pF, Dipmica | C0534 |
| C5 | Capacitor, 9-35 pF, Trimmer | C0709 |
| C6 | Capacitor, 9-35 pF, Trimmer | C0709 |
| C7 | Capacitor, .001 µF, 1 kV, Disc | C0235 |
| C8 | Capacitor, 1 µF, 35 V, Tant | C0524 |
| C9 | Capacitor, 1 µF, 35 V, Tant | C0524 |
| C10 | Capacitor, 56 pF, Dipmica | C0534 |
| C11 | Capacitor, 9-35 pF, Trimmer | C0709 |
| C12 | Capacitor, 9-35 pF, Trimmer | C0709 |
| CR1 | Diode, 1N4151 | CR0150 |
| CR2 | Diode, 1N4151 | CR0150 |
| L1 | Inductor, 100 µH | L0073 |
| L2 | Inductor, .82 µH | L0059 |
| L3 | Inductor, .15 µH | L0069 |
| L4 | Inductor, 100 µH | L0073 |
| L5 | Inductor, .82 µH | L0059 |
| L6 | Inductor, .15 µH | L0069 |
| Q1 | Transistor, 2N4264 | Q0310 |
| Q2 | Transistor, 2N4264 | Q0310 |
| R1 | Resistor, 2.7Ω, 1/4 W, 5% | R1697 |
| R2 | Resistor, 2.7Ω, 1/4 W, 5% | R1697 |
| | Standoff, 1/8 Lg | E0224 |
| | Terminal | E0191 |
| | Terminal | E0100 |

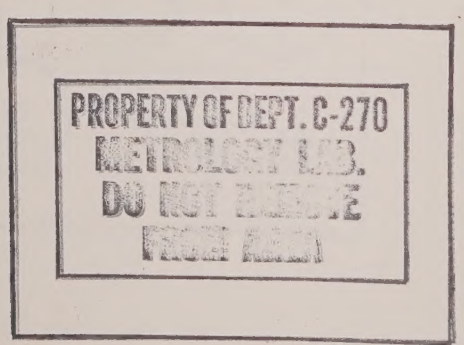

MP MASTER
MA34072